OKIDATA
an OKI AMERICA company

Introduction to Xerography

OKI

P/N 59226301

Introduction

to

Xerography

This document may not be reproduced without written permission of the OKIDATA® Technical Training Group. Every effort has been made to ensure the accuracy of the information contained in this training course. Okidata is not responsible for errors beyond our control.

© 1992 by Okidata All rights reserved.

Third Edition, December 1992

Reprinted with the permission of the Xerox Corporation

Edited by the Okidata Technical Training Group

Please address any comments on this publication to:

Technical Training Group

Okidata

532 Fellowship Road

Mount Laurel, NJ 08054-3499

OKIDATA is a registered trademark of Oki Electric Industry Company, Ltd.; marques deposee de Oki Electric Industry Company, Ltd.; marca registrada, Oki Electric Industry Company, Ltd.

Table of Contents

INTRODUCTION

Charging.....2
Imaging.....2
Exposing.....2
Developing.....2
Transferring.....2
Fusing.....2
Cleaning.....2

ELECTROSTATICS

Introduction.....5
Electrostatic Theory.....6
Insulators, Conductors, and Semiconductors.....8
Field Strength.....9
Ground.....10
Review.....11
Review Answers.....12

PHOTORECEPTORS

Introduction 13

Substrate 15

Oxide Layer 15

Photoconductive Layer 16
- Selenium Alloys 16

Trapping Layer 17

Thickness of Layers 17

Photoconductor Characteristics 18
- Spectral Response 19
- Optimizing the Spectral Response 23
- Photographic Speed 26
- Crystallization 27
- Dark Decay Rate 28
- Fatigue 28
- Durability 28

Summary 29

Review 31

Review Answers 32

CHARGING

Introduction 33

Charging 34

Scorotron 38

Dicorotron 39

Review 41

Review Answers 42

IMAGING

Introduction 43

Platen Glass 44

Exposure Lamp 44

Lens 46

Mirrors 48

Stray Light 49

Strip Scanning 49
- Method 1 50
- Method 2 51
- Method 3 52
- Method 4 53

Flash Imaging 54

Review 55

Review Answers 56

EXPOSING

Introduction 57

Photoreceptor Discharge 58

Exposure Time 60

Edge Erase/Interdocument Erase 61

Summary 61

Review 63

Review Answers 64

DEVELOPING

Introduction 65

Electrostatics of Developing 68

Developer Materials 70
- Toner 70
- Carriers 70
- Toner Concentration 71

Toner Dispensing 72
- Toner Dispensing Control 72
- Toner Dispensing Mechanism 73

Developer Transport Systems 73
- Magnetic Brush Developing 73
- Biasing the Magnetic Roll 74
- Single-Component Magnetic Brush Systems 74
- Cascade Developing 75
- Bias Baffle 75
- Developer Electrode 75

Summary 76

Review 77

Review Answers 78

TRANSFERRING

Introduction 79

Toner Transfer 80

Pretransfer 82

Paper Removal 83
- Stripping Mechanism 83
- Detack Corotron 83
- Air Manifold 83

Review 85

Review Answers 86

FUSING

Introduction 87

Conduction Fusing 88
- Fuser Roller 89
- Pressure Roller 89
- Fuser Lubricating Systems 89
- Fuser Cleaning Systems 90
- Paper Stripping Systems 90

Radiant Fusing 90

Convection Fusing 91

Combination Radiant/Conduction Fusing 91

Vapor Fusing 91

Review 93

Review Answers 94

CLEANING

Introduction 95

Reducing the Charge 96

Removing the Toner 97
- Cleaning Blade 97
- Magnetic Brush 97
- Soft Brush 98

Disposing of or Recirculating the Toner 98
- Toner Disposal 98
- Toner Recirculation 98

Removing the Remaining Charge 99

Review 101

Review Answers 102

PROCESS INTERACTION

Introduction 103
Charging 106
Imaging 107
Exposing 108
Developing 109
Transferring 110
Fusing 111
Cleaning 111
Summary 111

INTRODUCTION

The modern plain-paper copying machine consists of complex optical, mechanical, and electrical systems. These systems feed paper into the copier, make a permanent image of an original on the paper, and feed the finished copy out of the copier. The heart of the copier, the process for making the permanent image of the original, is based on the science of xerography. This handbook will introduce you to the seven processes which make up xerography. It gives you, in easy-to-understand language, a detailed look at the processes of xerography and at the science that makes them work together.

This information is helpful to anyone involved in the service, sales, or purchasing of Okidata LED Page Printers or their components.

For the service force, understanding the xerographic processes can decrease the repair time on LED Page Printers. Most service calls are for print quality problems. Knowing how the xerographic processes work, and what the outputs of each process are, enables you to isolate and correct the problem area more quickly.

Xerography consists of a system of seven processes and related equipment. All seven are briefly described in the following paragraphs. The xerographic processes are centered around a piece of equipment, the photoreceptor. The processes, and the equipment involved in each, are interrelated, and the processes take place simultaneously. As a result, all seven must be functioning correctly to produce good output. The interrelationships will become more clear as you read through this handbook.

Xerography, as explained in this manual, pertains to copier operation. The major differences between copiers and Okidata LED Page Printer operation are:

- the Okidata image drum is charged with a negative voltage.
- Exposure

  The areas of the Okidata image drum that are exposed to light become "less negative" than the charged area of the drum

Charging

Charging prepares the photoreceptor. In charging, a uniform electrical charge is deposited on the surface of the photoreceptor.

Imaging

Imaging converts the "real" image on the original into an optical or projected image. In some cases, the projected image is enlarged or reduced. In the Okidata LED Page Printers, imaging occurs in the "Page" Memory of the Control Unit.

Exposing

The exposing process causes the level of charge on the photoreceptor surface to change to correspond with the size and form of the projected image. After exposure, the areas of the photoreceptor surface which match the lines, letters, and other information on the original retain much of the charge applied during charging. Segments of the photoreceptor which correspond to the non-image areas of the original have a reduced electrical charge.

Developing

Developing deposits particles of toner in the areas on the photoreceptor which have high electrical charges and prevents the toner from depositing in the areas with low charges. This is accomplished by applying a charge to the toner particles which is the opposite of the charge on the photoreceptor. After development, a toner image is visible on the photoreceptor.

Transferring

Transferring brings the copy paper into contact with the photoreceptor so that the toner image is transferred to the paper. The transfer process involves applying a charge onto the paper so that the toner particles adhere to the paper instead of the photoreceptor. After transferring, the toner image is on the paper, not on the photoreceptor.

Fusing

The fusing function melts the particles of toner, causing the toner to flow into the top surface of the paper. After fusing, the copy image is permanent.

Cleaning

Cleaning removes any remaining toner from the photoreceptor and ensures that the photoreceptor is ready for charging again. The cleaning process involves applying another charge to the photoreceptor so that any remaining toner can be easily removed.

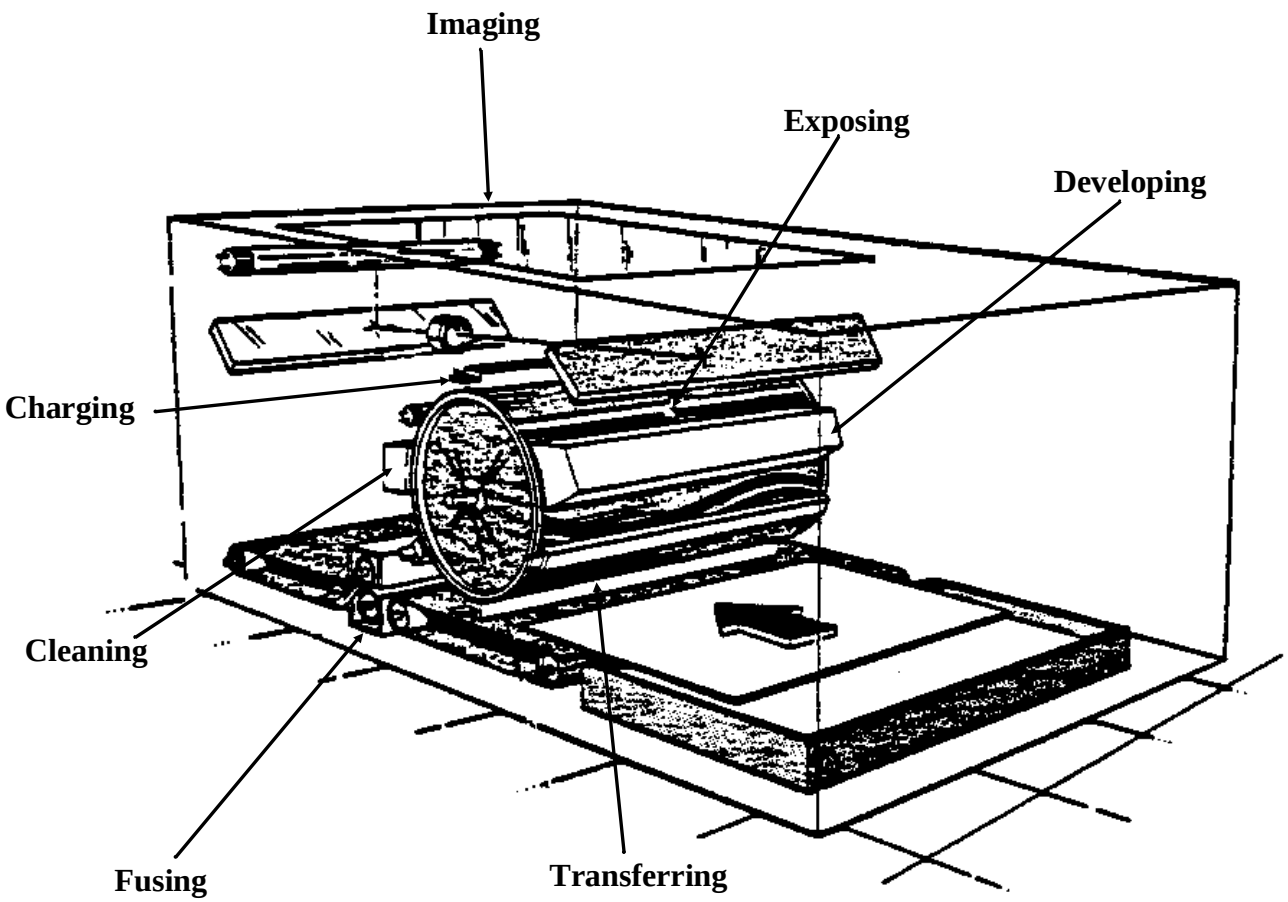
Imaging
Exposing
Developing
Charging
Cleaning
Fusing
Transferring

These seven processes are the heart of xerography. A great many xerographic printers are on the market; therefore, the processes are carried out in a variety of ways. This handbook will explain the basic processes in detail and will familiarize you with a variety of designs used in xerographic copiers today.

This handbook is divided into ten sections. The first section explains the basic physics called electrostatics, upon which xerography is based. The second section is about photoreceptors, the component central to the xerographic system. The next seven sections detail the seven processes of xerography. The last section, process interaction, talks about how these processes are interrelated, discusses some problems that can occur in the xerographic processes, and describes the symptoms of these problems. Each section ends with a short exercise, so you can be sure that you understand the basic content of one section before going on to another.

By reading this handbook and completing the exercises, you should be able to do the following:

- Explain the basic electrostatic principles used in xerography.
- List the major processes of the xerographic system.
- List various designs that can be used for each process.
- Explain how the various designs affect copy quality.

ELECTROSTATICS

Introduction

The following diagram shows the components of a model copier that are associated with the seven xerographic processes.

Charging, exposing, developing, transferring, and cleaning are associated with the photoreceptor. They all have to do with creating a toner image of the original on the photoreceptor, moving the image from the photoreceptor to a sheet of copy paper, or removing any remaining toner from the photoreceptor. This is done by controlling electrostatic charges on the photoreceptor and on the toner particles; that is, controlling the positive and negative charges, the basic components of electrostatics. This section of the handbook explains enough about electrostatics for you to learn the xerographic processes in detail.

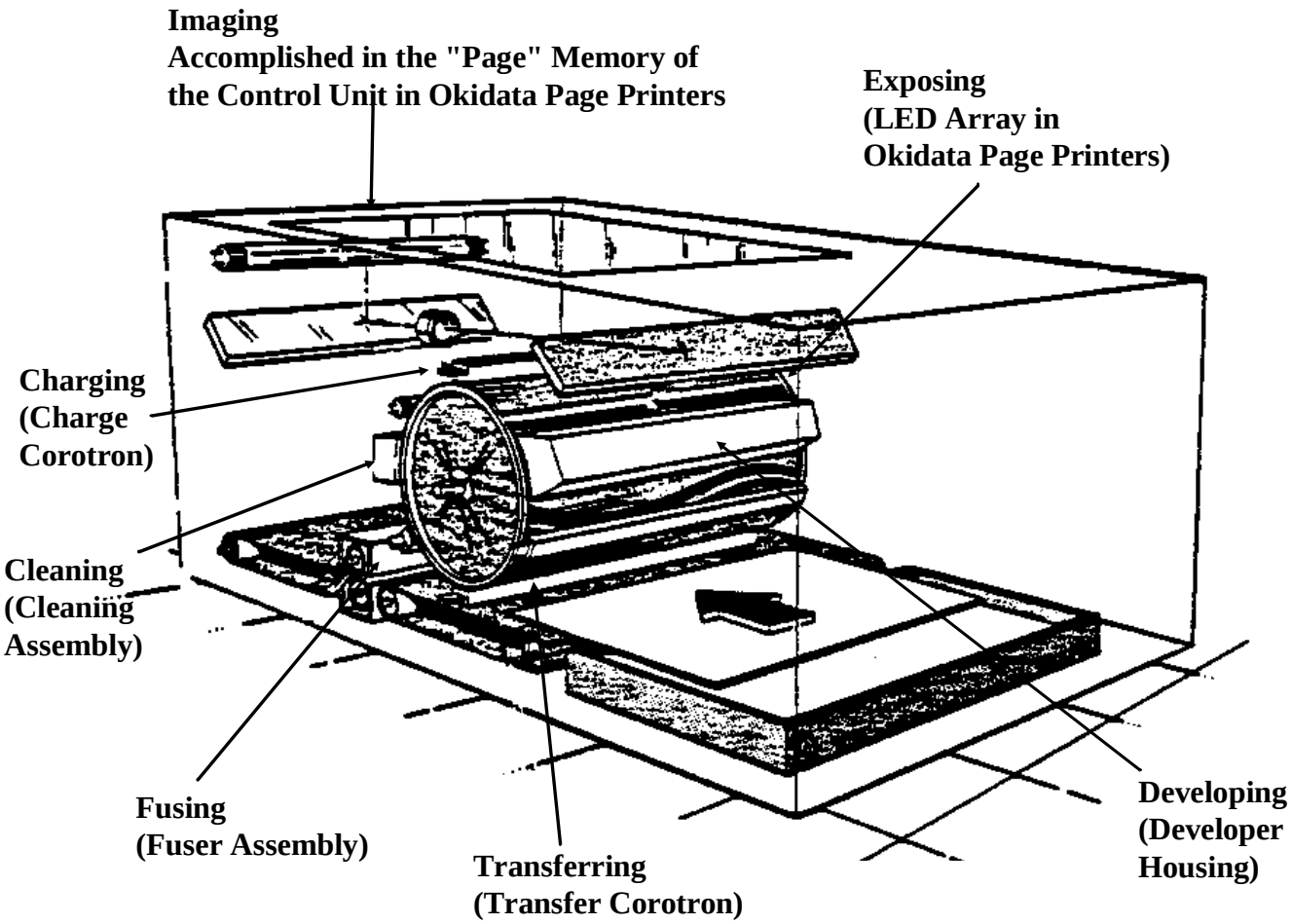

Electrostatic Theory

Electrostatics is the study of the movement of positive and negative charges. Since these charges have never really been seen, understanding the following information may take a little imagination.

All things, including the air around us, are composed of atoms. Therefore, the starting point for understanding electrostatics is an explanation of atoms, protons, and electrons. An atom consists of a nucleus of positively charged particles, called protons, circled by one or more negatively charged particles called electrons.

By controlling the balance, or ratio, of negative electrons and positive protons, materials can be made to have an overall positive or negative charge. Materials which contain an equal number of electrons and protons are considered electrically neutral or balanced.

This balance of electrons and protons in a material can be lost by adding or taking away electrons. To alter the balance requires that additional energy be applied to the material.

Balanced Atoms

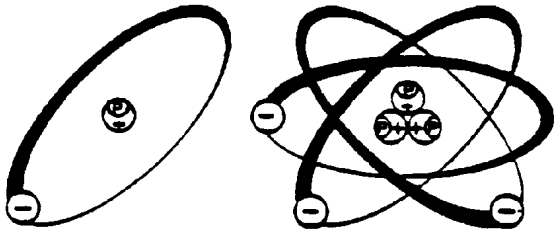

Equal numbers of protons and electrons

When an atom gains an electron, it then has an extra negative charge. The atom is charged negatively. When an atom loses an electron, an excess of protons remains. The atom is charged positively. A charged atom is called an ion.

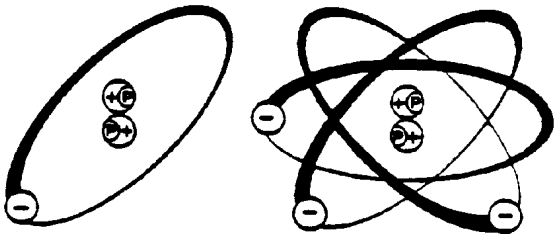

Missing Electrons **Extra Electron**

Electrostatics deals with the attraction between opposite charges and the repulsion between like charges. The forces that form between charged objects are called electrostatic fields. In xerography, electrons are moved to create electrostatic fields of attraction or repulsion. Toner can be put where it is needed or removed from where it is not wanted.

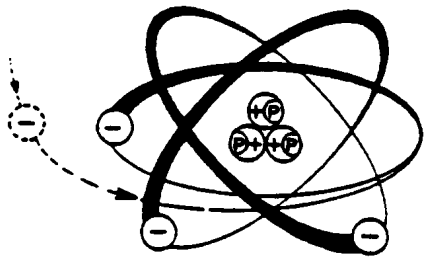

Electron attracted to positively charged atom

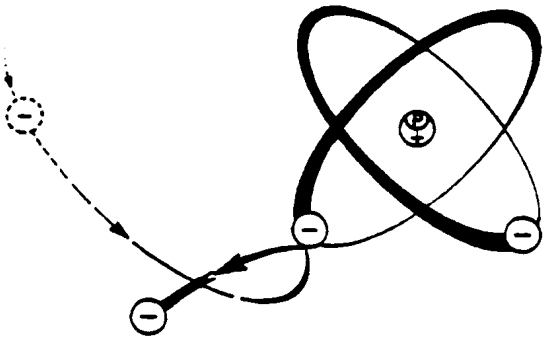

Electron repelled by negatively charged atom

Up to now, we have been talking about charges in an individual atom. In reality, we deal with not one atom but many molecules, each made up of many atoms. When an electron moves away from one molecule, it moves towards another molecule. Electrons that have been forced out of the circling paths cause a molecule to have an excess of protons and an excess of electrons somewhere else.

The effect of electron movement becomes more important when we learn about the charges on the surface of a photoreceptor and the construction of the photoreceptor itself.

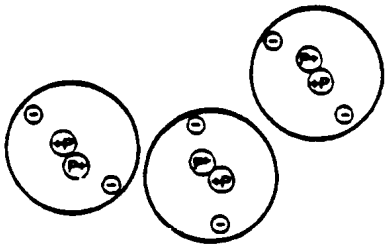

Balanced molecules

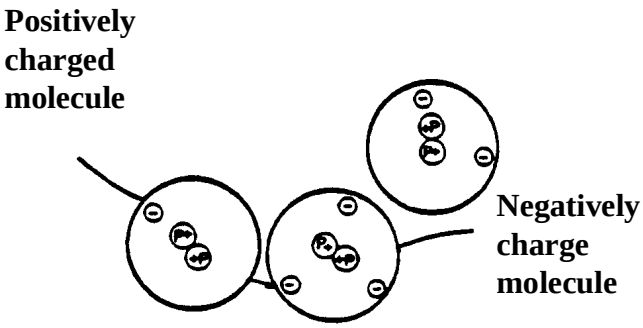

Electron jumps

Insulators, Conductors, and Semiconductors

The number of electrons that can be moved from atom to atom within a molecule depends upon both the material and the amount of force being applied to move the electrons.

In some materials, such as copper or aluminum, electrons can be moved relatively easily. These materials are called conductors. Conductors require very little applied force to initiate electron movement.

In other materials, such as glass and rubber, electrons are very difficult to move. These materials are called insulators or dielectrics. A lot of force needs to be applied to insulators before the electrons will move.

Some materials, such as selenium or silicon, can be either an insulator or a conductor, depending on the current conditions. These materials are called semiconductors. A semiconductor for which light determines whether it acts as an insulator or a conductor is called a photoconductor. At no time however, is a semiconductor a perfect insulator or a perfect conductor.

The importance of the semiconductor to xerography is the ability to use the insulator stage to ensure that the material stays electrically charged and then to transform the material to the conductor stage so that the charge can be discharged in non-image areas only.

Field Strength

Field strength is a measure of the force of attraction or repulsion that exists between charged materials. Three variables can affect field strength. The first variable is distance. When the charged materials are moved closer to each other, the field strength becomes greater. The second variable is the amount of charge on each material. When the materials have stronger charges, the field strength between them is greater. The third variable is the shape of the field, which is determined by the field source as well as the shape of the charged objects.

Electrical arcing is an occasional result of field strength. For example, when a corotron is set the proper distance from a photoreceptor, arcing may occur if the charge voltage is too high. Likewise, even though a corotron has the proper amount of charge, arcing may occur if the corotron is positioned too close to the photoreceptor.

Similarly, a corotron wire with a kink or nick may arc even though the distance and the amount of charge are correct. The arcing is caused by the change in shape of the corotron wire.

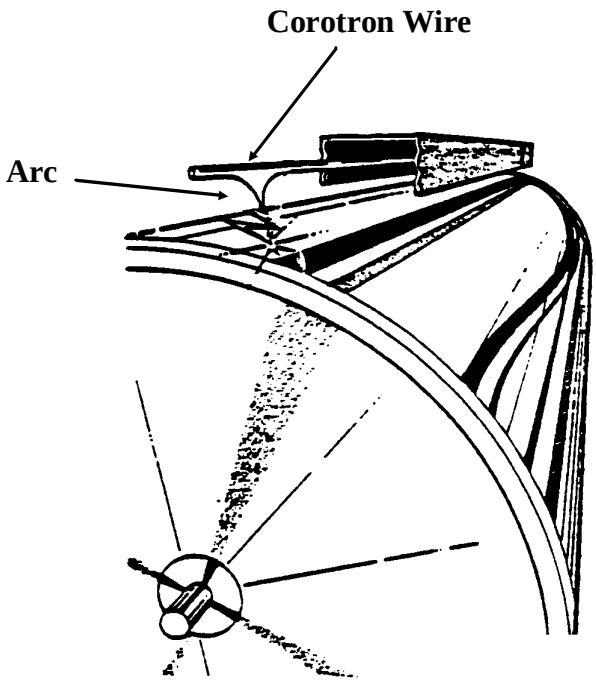

Corotron too close

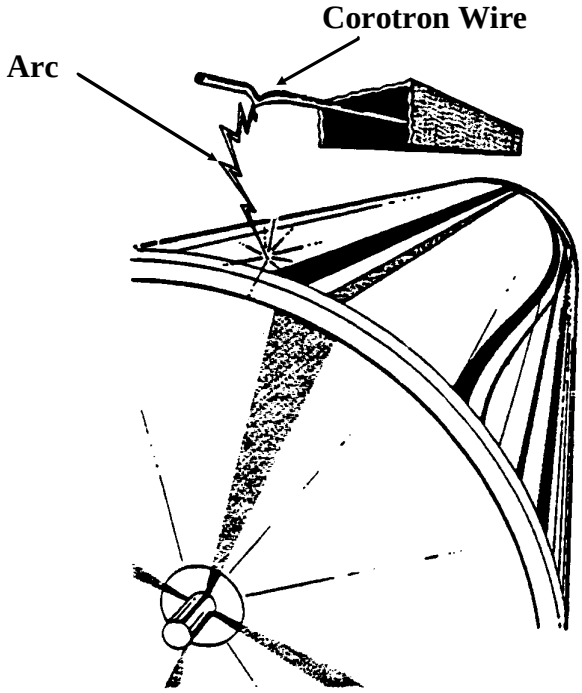

Kink in corotron wire

Ground

When a material develops, or is exposed to, excess charge, it tries to maintain electrical neutrality by moving electrons around. Ground provides a passage by which electrons can travel to and from a material in order to maintain its electrical neutrality.

Let's say that a conductor not connected to ground is put near a positively charged material.

The electrons in the conductor realign themselves to match the charges, resulting in an electrostatic field. This results in some protons within the conductor material lacking electrons, making them positive charges. Another electrostatic field pulling the electrons in the opposite direction results. This second field has the effect of decreasing the strength of the first field.

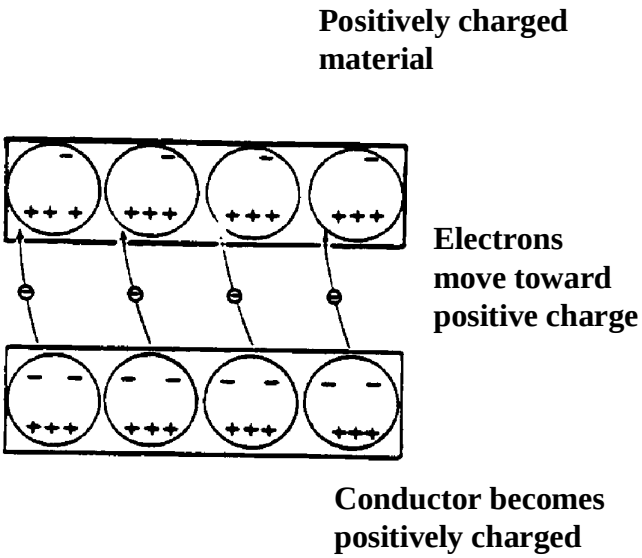

Let's look at the same situation with the conductor connected to ground.

Starting with the conductor near a positively charged field, the electrons will (again) realign themselves. But this time, electrons are drawn from ground to match the positive charges which result from the electron shift. Because these molecules are neutral instead of positive ions, the field between them and the realigned electrons is considerably weaker. Thus, the field between the electrons and the original positive charges is stronger.

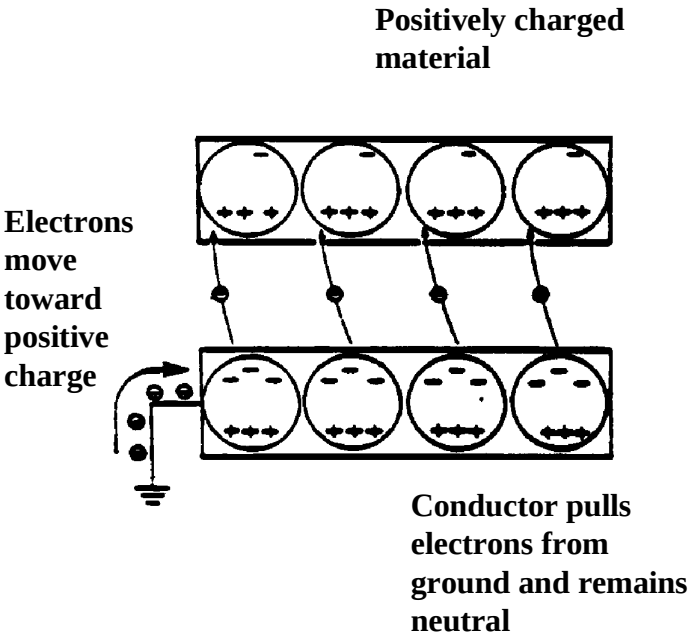

Review

1. The negative particle of an atom is the

   a. Neutron

   b. Proton

   c. Electron

2. An electrostatic field is

   a. the path of an electron around an atom.

   b. the forces that form between charged objects.

   c. the bonding agent that keeps protons together.

3. The three major variables that can affect field strength are:

   a. _____

   b. _____

   c. _____

4. The five xerographic processes which are affected by field strength are:

   a. _____

   b. _____

   c. _____

   d. _____

   e. _____

Review Answers

1. The negative particle of an atom is

   c. Electron

2. An electrostatic field is:

   b. the forces that form between charged objects.

3. The three major variables that can affect field strength are:

   Distance between charged objects

   Strength of charge

   Shape of the charged objects

4. The five xerographic processes which are affected by field strength are:

   a. Charging

   b. Exposing

   c. Developing

   d. Transferring

   e. Cleaning

PHOTORECEPTORS

Introduction

To understand the importance of the photoreceptor, we will again consider the seven processes of xerography.

Each function produces an output:

- Charging

  Charged photoreceptor

- Imaging

  Image projected toward the photoreceptor

- Exposing

  Latent image on photoreceptor

- Developing

  Toner image on photoreceptor

- Transferring

  Toner moved from photoreceptor to copy

- Fusing

  Fixed image on the copy

- Cleaning

  Clean photoreceptor

Five of the outputs show something that has happened to the photoreceptor. It is important to understand the construction and the materials of the photoreceptor in order to understand the processes.

A photoreceptor is the part in a copier which receives the projected image of the original for copying.

During the charging process, a photoreceptor must be able to receive and hold a charge in the dark (act as an insulator). The charge the photoreceptor holds must be uniform across its entire surface. During exposing, the photoreceptor must release that charge from areas exposed to the light (act as a conductor). This means that the photoreceptor must be made from photoconductive material.

However, the photoreceptor must be constructed so the movement of electrons can be controlled. Charges can be placed, held, and released by the photoreceptor at different times and under different conditions.

Light is required to change a photoreceptor from an insulating material to a conducting material. This phenomenon can be shown by placing one probe of an ohmmeter on the photoreceptor surface and the other end inside the photoreceptor, once in the light and once in the dark. In the dark, the ohmmeter will not show continuity; in the light, it will. If only part of the photoreceptor is exposed to the light, only that part conducts.

To accomplish the control of the electron movement, the photoreceptor is not constructed of all photoconductive material. Instead, the photoconductor consists of layers of special materials:

- substrate
- oxide layer
- photoconductive layer
- trapping layer

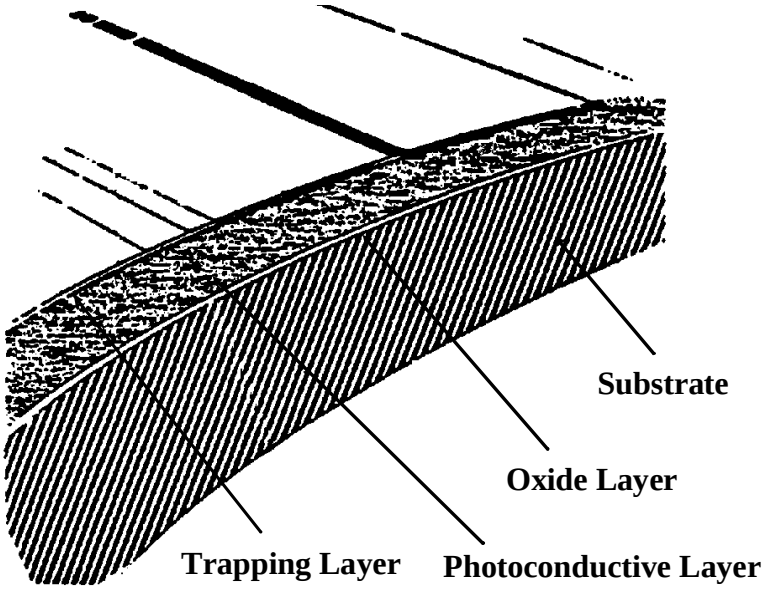

Substrate

The substrate has several purposes. First, the substrate helps to maintain a uniform charge across the surface of the photoreceptor. Second, the substrate affects the field strength of the photoreceptor charge. Third, the substrate provides the electrical grounding for the photoreceptor. All three have a strong effect in the charging, exposing, and cleaning processes. They also require a substrate material which is a good conductor.

The last purpose is a physical purpose. The substrate acts as a base for the very thin photoconductive layer. For this, the substrate must be a uniform thickness and must have no blemishes. Any dirt, scratches, bumps, or ridges, affect the consistency of the photoconductive layer and result in copy quality defects and decrease the life of the photoreceptor.

Once the substrate shape is machined, it goes through an elaborate cleaning and polishing (burnishing) process. The burnishing process ensures that the substrate is absolutely smooth and uniform. Once the substrate is burnished, it is cleaned. The chemical cleaning process removes all the remaining surface impurities, as well as any oils used in the machining process.

The substrate of most photoreceptors is made of aluminum. Aluminum is a good conductor. It is also less expensive to refine, machine, burnish, and clean than most other conductors.

Oxide Layer

The oxide layer is a super-thin layer between the substrate and the photoconductor layers. It prevents electrons from moving casually from the substrate (a conductor) to the photoconductor. Without the oxide layer, the electrons would move so easily that the photoreceptor would not be able to maintain a charged surface.

The oxide layer is formed by allowing the substrate surface to oxidize in the same manner that iron or steel rusts. However, the oxidation process is carefully controlled.

The substrate is heated with a controlled amount of water vapor. The moisture from the water vapor is just enough for the surface to "rust".

The oxide layer forms a less-than-perfect conductor from the surface molecules of the substrate, a conductor.

Photoconductive Layer

The most important part of the photoreceptor is the photoconductive layer. It is through this layer that charges move, based on the presence of light. This allows the electrostatic theory to play a direct role in xerography. Several different materials are currently used for the photoconductive layer, such as selenium alloys, arsenic triselenide, cadmium sulfide, amorphous silicon, or a variety of organic compounds. The most common of these are the selenium alloys. We will confine our discussion to photoreceptors made with these materials.

Selenium Alloys

Selenium is used as the base for most photoconductive layers. A photoreceptor made of pure selenium, however, does not have the properties necessary for long-term good copy quality. As a result, photoreceptors are usually made from a combination of selenium and some other material, such as arsenic, antimony, and tellurium. The process of adding materials to selenium is called doping. Selenium is combined with other materials so that certain important photoreceptor characteristics, such as spectral response, photographic speed, crystallization, dark decay rate, fatigue, and durability, can be controlled. These characteristics are discussed later in this section.

The process of making the photoconductive layer is carefully controlled. The ratio of doping agents must be exact. No other chemicals can be present. Because of the dangers of contamination, the manufacturing takes place in clean rooms, with carefully controlled atmospheres and very restrictive access requirements.

The photoconductive layer is applied to the substrate in a vacuum chamber at high temperatures. For selenium alloys, the required temperature range is approximately 500 degrees Fahrenheit

To apply the photoconductive layer, pellets of selenium and the doping agents are put in a heat boat below a vacuum chamber, which contains the substrate. As the temperature is increased, the pellets start to vaporize. The vapors travel to the substrate. Once on the substrate, the vapors condense. The substrates are constantly rotated to ensure a uniform formation of the photoconductive layer.

Selenium and the doping agents do not vaporize at the same temperatures. To ensure that the photoconductive layer forms correctly, the temperatures in the vacuum chamber must be carefully monitored.

Selenium alloys account for the majority of photoreceptors. A selenium-based photoreceptor which is not a selenium alloy is arsenic triselenide. Arsenic triselenide photoconductors are not manufactured in exactly the same manner as selenium alloys. When the photoconductors are manufactured, the substances combine chemically to form the **compound** arsenic triselenide.

The Okidata LED Page Printers use a material called **O**rganic **P**hoto **C**onductor (OPC) for the photoconductive layer.

Trapping Layer

The trapping layer is very similar to the oxide layer. It is formed by the very top surface of the photoconductor layer reacting to air.

Its purpose is a little different from that of the oxide layer. The oxide layer prevents substrate electrons from moving easily into the photoconductor. The trapping layer prevents electrons from easily moving among the molecules in the photoconductor layer. The trapping layer makes a perfect insulator layer out of the surface of the photoconductive layer.

The trapping layer is critical to the xerographic process. The charges are held to the surface of the drum in this layer.

Thickness of Layers

The oxide and trapping layers are thin. The ratio of thicknesses of these two to the thickness of the photoconductive layer is important. To give you an idea of relative thicknesses, imagine an oxide layer that is one-and-a-half inches thick and a trapping layer that is one-half inch thick. To keep the same ratio that is used in photoreceptors, the photoconductor layer would be 695 feet thick!

The thickness of the photoconductor is actually measured in microns. One micron is approximately 0.00004 of an inch. The figure below shows the relative thicknesses of the average selenium photoreceptor. The thickness of the substrate is not listed because it is not critical for the electrical properties of the substrate.

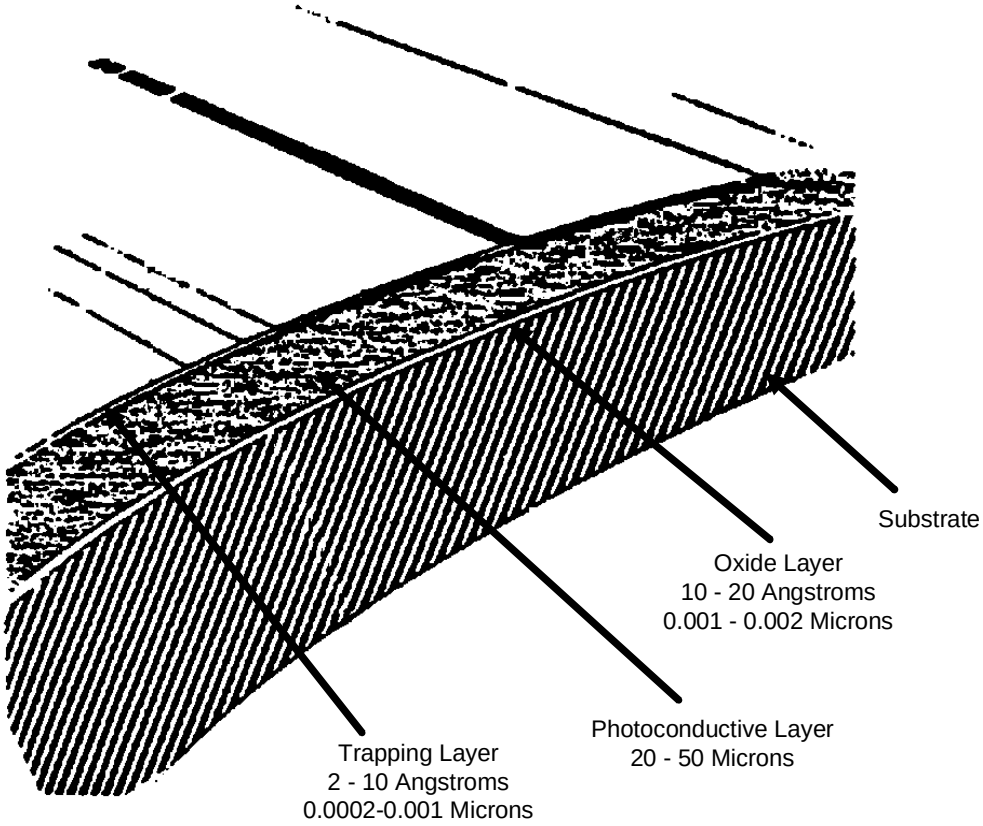

Photoconductor Characteristics

The use of different alloys affects the photoconductor's characteristics. These characteristics are considered when choosing the photoreceptor for a copier. The photoreceptor must be able to support the speed at which the copier will operate, and match the exposure lamp, the imaging method, and the developing method.

In this section, the six main photoconductor characteristics will be discussed.

- spectral response
- photographic speed
- crystallization
- dark decay rate
- fatigue
- durability

Spectral response and photographic speed can be affected by other elements in the xerographic system. Because of this, these two will be covered in detail. The remaining characteristics can only be affected by mishandling the photoreceptor.

The graphs supplied are to give you an idea of the characteristic differences among the selenium alloys and compounds. The information listed is not scientifically precise.

Spectral Response

Spectral response, sometimes called color response, refers to the photoreceptor's ability to sense and react to the spectrum of colors. Given an original with any color on it, most photoreceptors should be able to convert the colors on the original to fairly dense blacks (or grays). Ideally, a photoreceptor should respond to the full spectrum of colors equally.

In xerography, the image of the original is projected onto the photoreceptor using light from an exposure lamp and any number of mirrors and lenses. The discussion of spectral response begins by talking about light.

When a beam of white light is passed through a prism, the light is split into bands of colors. Each color in this band has a corresponding wavelength and energy level. The colors that show up on this band depend on the kind of light source. White light contains most of the colors in the visible color spectrum. More specifically, white light contains the three primary colors of light: red, green, and blue.

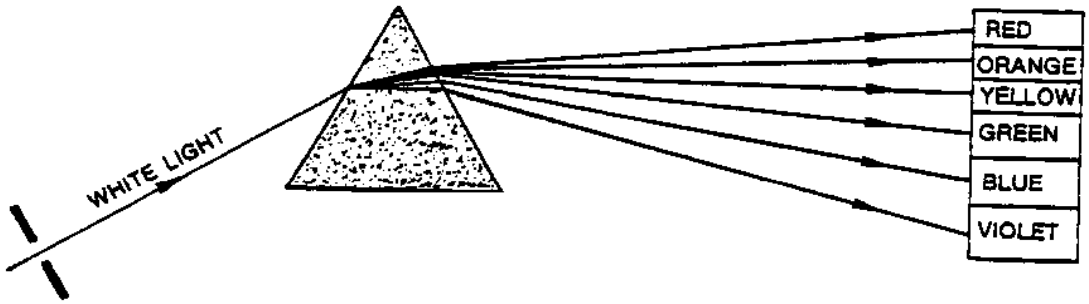

Three factors contribute to our ability to see a world of color. First is the white light source, which projects a full spectrum of colors onto materials. Second are materials which absorb some wavelengths of energy and reflect others. Third is the human eye, which responds to wavelength groups of red, green, and blue colors.

Imagine that you are looking at a red apple. This figure shows what is actually happening. A white light source is projected onto the apple. The apple surface absorbs all of the wavelengths except those which correspond to red light. The red light wavelengths are reflected to your eyes. Your eyes see the red light, and you perceive those wavelengths as red.

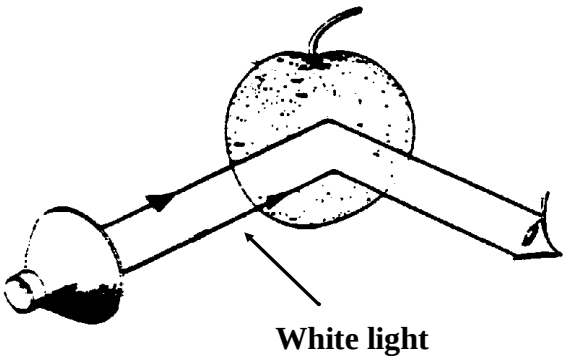

The same basic vision process is used in xerography. Instead of the human eye responding to a color wavelength reflected off an object, the photoreceptor responds to the light wavelengths reflected off the original.

The photoreceptor reacts to the projected color wavelengths and corresponding energy levels. It discharges the photoconductive layer according to how sensitive the photoconductive material is to each energy level.

Imagine an original consisting of a black letter on a white background. First, a white light is projected onto the original.

White is the sum of all the colors. Therefore, in the white areas of the document (the background areas), no color wavelengths are absorbed. All the color wavelengths and the corresponding energy levels from the lamp are projected to the photoreceptor. The charged areas of the photoreceptor upon which the "white" energy levels are projected are then discharged. This discharge takes place because white light contains at least one wavelength to which the material is sensitive.

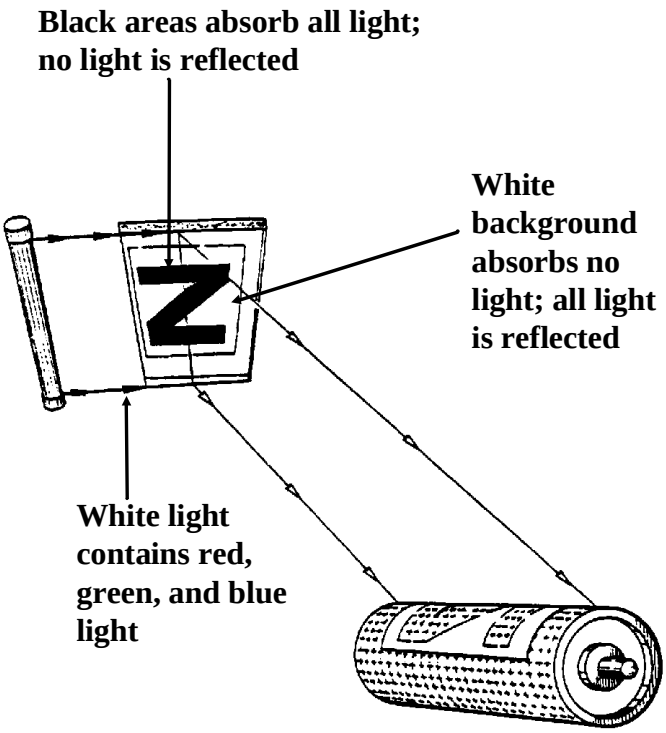

Black is thought of as the absence of color. The black areas of the original absorb all the energy which is projected from the lamp. This means that no energy is projected onto the matching areas of the photoreceptor, and the charge is not lost.

Let's discuss originals that have color, how different types of photoreceptors respond to the color spectrum, and the ability of the photoreceptor to reproduce colored originals. The following diagram shows the white light-original-photoreceptor combination. We will start this discussion with a pure selenium photoreceptor.

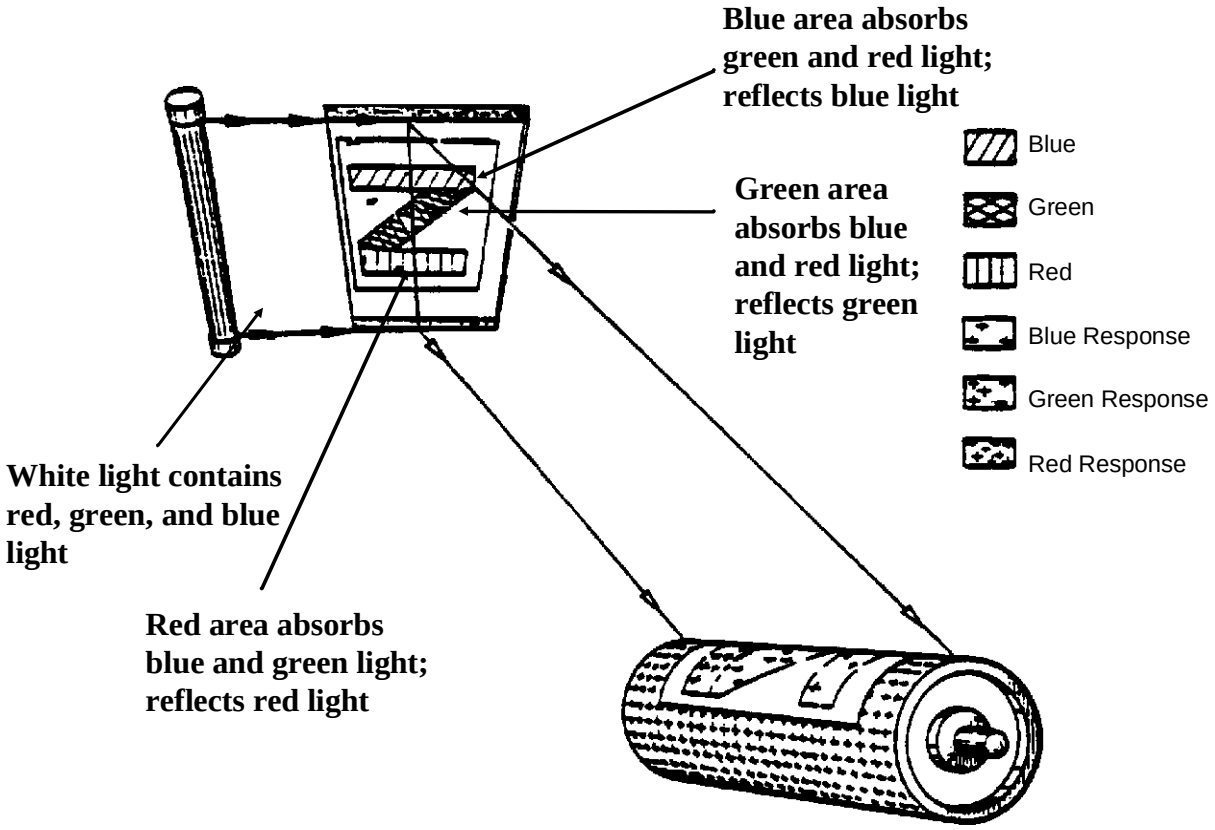

The following diagram shows the selenium sensitivity curve for the color spectrum.

Selenium is very sensitive to blue light. The blue light wavelengths are the primary contributors in discharging the photoreceptor.

Selenium's sensitivity to green light is not as great as to blue light. Some of the photoreceptor's charge is lost, but not all of it.

Selenium is not very sensitive to red light. Very little photoreceptor discharge takes place in areas exposed to red light.

The selenium photoreceptor has the following ability to reproduce blue and red originals. Blue originals cannot be reproduced because they appear similar to the white background. Red originals would copy almost as dark as black originals.

The green areas of an original would copy almost as dark as the red areas. This is because the green areas of the original reflect green light, and selenium is slightly sensitive to green light.

In terms of electron movement, blue light produces many of free electrons, green light produces a few free electrons, and red light produces hardly any free electrons.

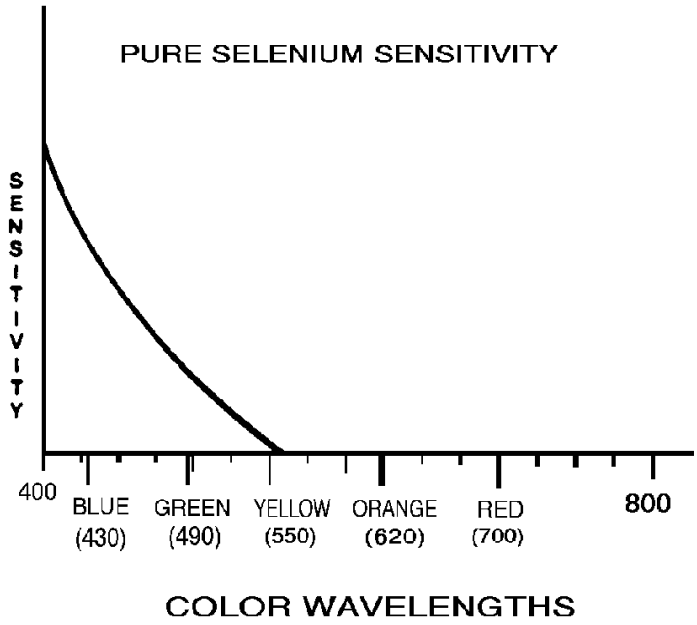

Optimizing the Spectral Response

A pure selenium photoreceptor does not react equally to all the color spectrum. The spectral response of a photoreceptor can be optimized so a relatively equal amount of photoreceptor discharge takes place regardless of the color of the original.

The first method for improving spectral response is modifying the material used for the photoconductive layer. In selenium alloy photoreceptors, the doping process affects the spectral response. Below is the sensitivity curve for selenium-tellurium compared to pure selenium.

A selenium-tellurium photoreceptor is more sensitive to green light and slightly sensitive to red light. The green light plays an important roll in discharging the selenium-tellurium photoreceptor. Blue documents do reflect green light. Therefore, they appear darker to the selenium-tellurium photoreceptor.

How the tellurium affects the spectral response depends upon the percentage of tellurium used in the doping. The greater the tellurium percentage, the greater the effect on spectral response.

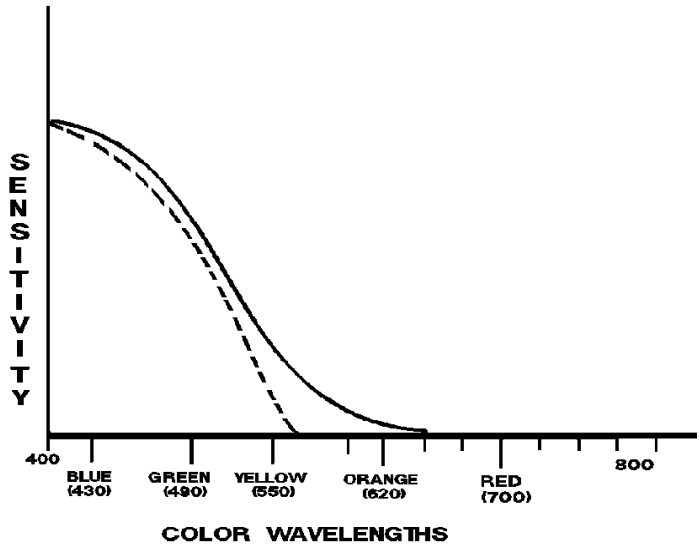

The manner in which the substances are vaporized to form the photoconductive layer also affects the spectral response, as well as other photoreceptor characteristics. The tellurium is not always spread evenly throughout the selenium layer. In some photoreceptors, the selenium and tellurium end up in layers on the substrate. This layering is done by controlling the temperature during the vaporization process.

The second method for improving spectral response is to modify the original light source (the exposure lamp). We started with a white light, which has all the colors of light. All the color wavelengths were being projected onto the original. By changing the lamp, the troublesome wavelengths can be eliminated at the source. Let's look at an example. For this, the photoreceptor is selenium-tellurium.

Let's change our white light to a green light. This green lamp projects only the green wavelengths onto the original.

Since the blue portion of the original does not reflect any green light, no light is projected from the original to the photoreceptor. As a result, no charge is lost in the blue areas of the photoreceptor. A blue document can be reproduced when using a green lamp and a selenium-tellurium photoreceptor.

The green document causes the green light from the lamp to be reflected to the photoreceptor. Therefore, a green document cannot be reproduced using a selenium-tellurium photoreceptor and a green lamp.

Red documents do not reflect green light. Therefore, a green lamp will not cause the selenium-tellurium photoreceptor to be discharged in the red area. Thus, red documents can be reproduced when using a selenium-tellurium photoreceptor and a green lamp.

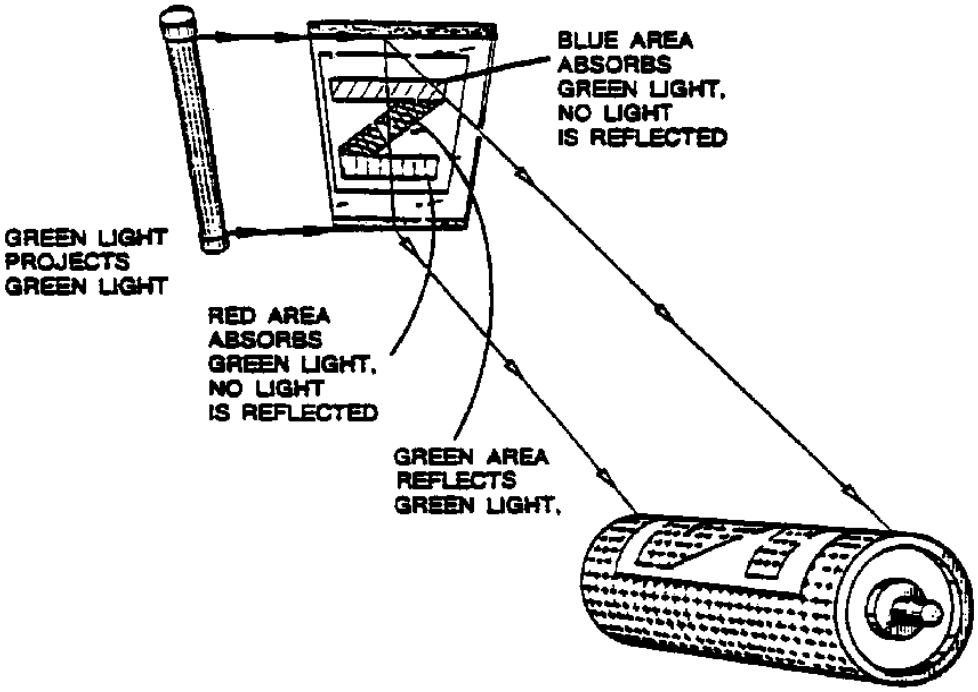

Green lamps were used extensively in the early xerographic copiers. The selenium photoreceptors were very sensitive to the blue wave lengths. The green lamps complimented the selenium photoreceptors. Together, they formed a balanced blue/green documents reproducible system. Newer photoreceptors (like selenium-tellurium), which have a broader spectral response and an ability to accommodate other types of lamps (like quartz halogen or xenon), provide better performance.

The third method for optimizing spectral response is to use an optical filter. Below is a diagram of a white light-original-selenium tellurium scenario with a filter installed. This particular filter allows red and green wavelengths to pass through. It also absorbs, at varying percentages, the blue wavelengths.

The filter absorbs the blue light completely. No blue light reaches the photoreceptor. The corresponding blue areas, which reflect only blue light, do not lose any charge. As a result, blue documents can be reproduced. The green and red wavelengths pass through the filter to the photoreceptor, and the photoreceptor reacts as if the filter did not exist; very little charge is lost in the green areas, and almost no charge is lost in the red areas.

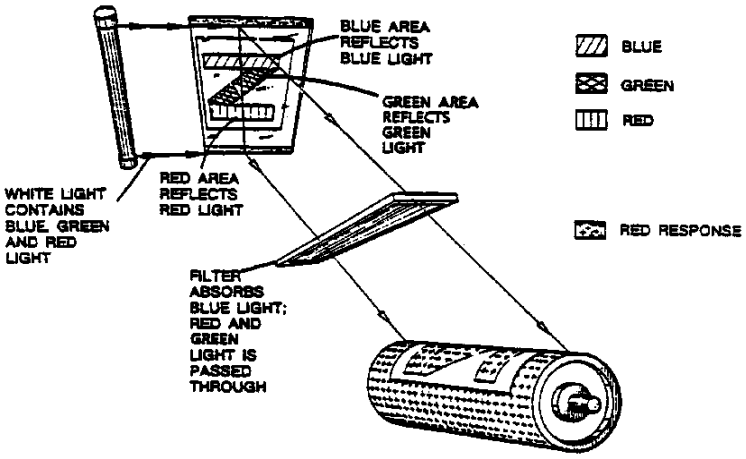

Photographic Speed

The photographic speed of a photoreceptor is the measure of the loss in charge when the photoreceptor is exposed to a given intensity of light for a given length of time.

In xerography, a charged photoreceptor is selectively exposed to light. The charge is taken away from the areas where the light projects onto the photoreceptor. For a good copy to result, the exposed areas of the photoreceptor must discharge within the time in which it is exposed. The use of specific alloys can ensure that the photoconductor is capable of discharging in the time required.

The photographic speed of the photoreceptor directly affects the type of exposure lamp used. An exposure lamp that projects an appropriate intensity of light must be used. Exposure lamps are subject to aging. Aging affects the intensity and uniformity of the lamp's output. The exposure lamp must be periodically replaced. The photographic speed is also affected by the age and condition of the photoconductor. Decreased photographic speed, caused either by an aging or dirty exposure lamp or an aging photoreceptor, translates into high background on the copies.

Crystallization

The selenium used in photoreceptors is subject to a chemical process called crystallization. During crystallization, the selenium molecules move from a loose, random pattern to a geometric pattern.

Crystallization has a negative effect on selenium's ability as a photoconductor. When fully crystallized, the photoreceptor can no longer be easily charged. The process of crystallization has a direct effect on both spectral response and photographic speed. This translates into decreases in copy quality.

Crystallization is a natural process. It cannot be eliminated. The process can be slowed by doping the selenium with either tellurium or arsenic.

Crystallization is accelerated by heat, by defects (such as scratches) in the selenium, or by exposure to chemical contaminants. By handling and storing the photoreceptors properly, the process can be slowed.

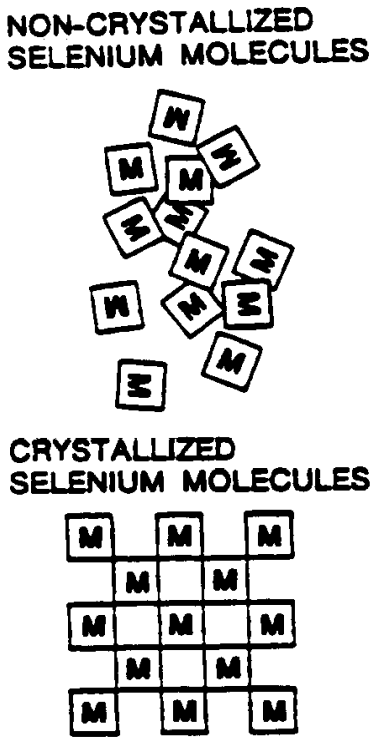

Dark Decay Rate

Although the photoreceptor acts as an insulator in the dark, it is not a perfect insulator. Some of the charge which is held in the dark leaks away. This loss of charge is called dark decay. The amount of charge that leaks away over a specific period of time is called the dark decay rate.

One way of identifying the dark decay rate is to measure the length of time it takes for a charged photoreceptor to lose half of its charge. The rate differs among photoreceptors, depending on the kind of selenium alloy used in the photoreceptor and the condition of the photoreceptor.

Fatigue

Multiple exposures to light in rapid succession can reduce the ability of a photoreceptor to get rid of the charge in the trapping layer. This reduced ability is called fatigue.

The rate at which a photoreceptor becomes fatigued is a product of the materials in the photoconductive layer. The addition of an alloy can reduce the fatigue factor.

Fatigue is a tremendous problem when a photoreceptor is exposed to an intense light, such as sunlight. The intense light can cause the electrons to move so far away from the selenium atoms that they can no longer be used for charge transfer.

Fatigue becomes a critical factor in the faster xerographic copiers. A photoreceptor in a fast copier must have a very low fatigue rate in order to handle the constant, quick exposure to light.

Fatigue is also an important consideration in the maintenance of a copier. If some photoreceptors are exposed to room light, they must be left in the dark for a length of time before they can function properly. This allows the electrons to return to the selenium atoms.

Durability

All things are subject to some form of wear and tear. Photoreceptors are no different. The ability to withstand wear and tear is called durability. Photoreceptors can be damaged by chemicals, lubricants, fusing agents, oils in your fingers, heat, or by the constant exposure to paper and developing agents. This damage translates into poor copy quality.

Photoreceptor defects can be scratches or abrasions in the photoconductive layer, the development of a film on the surface, oxidation (a chemical reaction between selenium and the environment), or rapid crystallization.

Like all the other characteristics, durability can be improved by adding an alloy to the selenium during the manufacturing process. The addition of arsenic or tellurium increases the durability drastically. The advantage in durability far outweigh the slight increase in dark decay rate.

Summary

Most photoreceptors consist of four layers:

- the substrate,
- the oxide layer,
- the photoconductor layer,
- and the trapping layer.

The photoconductive layer is made from a photoconductive material, such as selenium, combined (doped) with some other material. The selenium alloy conducts electricity in the light and acts as an insulator in the dark. The photoreceptor's characteristics are determined by the materials of which it is made. The importance of these characteristics will be discussed in the sections on charging, exposing, developing, transferring, and cleaning.

This page was intentionally left blank.

Review

1. A photoreceptor is called a photoconductor because

   a. its surface acts as a photographic film.

   b. it is a good conductor of electricity in the dark.

   c. it conducts electricity in the light and does not conduct in the dark.

2. A xerographic photoreceptor is made of four layers. Starting with the outer layer as number 1, number the layers.

   _____ Oxide Layer

   _____ Substrate

   _____ Photoreceptor Layer

   _____ Trapping Layer

3. Match the following:

   a. Durability

   b. Spectral response

   c. Dark decay

   d. Photographic speed

   e. Crystallization

   f. Fatigue

   ____ The amount of charge that leaks from the photoreceptor surface in the dark over a specific period of time.

   ____ Ability of a photoreceptor to resist wear and tear.

   ____ The ability of the photoreceptor to react to the color spectrum of light.

   ____ The speed at which a photoreceptor loses its charge when exposed to a given light intensity for a given time period.

   ____ The inability of the photoreceptor to get rid of charge from the trapping layer.

   ____ The movement of molecules from a loose, random pattern to a geometric pattern.

Review Answers

1. A photoreceptor is called a photoconductor because

   c. It conducts electricity in the light and does not conduct in the dark.

2. A xerographic photoreceptor is made of four layers. Starting with the outer layer as number 1, number the layers.

   3 Oxide layer

   4 Substrate

   2 Photoconductive layer

   1 Trapping layer

3. Match the following:

a. Durability	Ability of a photoreceptor to resist wear and tear.
b. Spectral response	The ability of the photoreceptor to react to the color spectrum of light.
c. Dark decay	The amount of charge that leaks from the photoreceptor surface in the dark over a specific time.
d. Photographic speed	The speed at which a photoreceptor loses its charge when exposed to a given light intensity for a given time period
e. Crystallization	The movement of molecules from a loose, random pattern to a geometric pattern.
f. Fatigue	The inability of the photoreceptor to get rid of charge from the trapping layer.

CHARGING

Introduction

The last two sections discussed the basics of electrostatics and photoreceptors. This section is the first of the seven actual processes in xerography. Here, you will learn how a charge is induced on the photoreceptor surface.

Recall that the photoreceptor acts as a conductor in the light and as an insulator in the dark. In order to induce a charge on the photoreceptor and have it hold, the charge must be induced in darkness. If the charge is put on the surface when the photoreceptor is exposed to light, the charge is immediately conducted to ground through the substrate. The photoreceptor surface remains electrically neutral.

Specific parts of a copier are used in the charging process.

- Photoreceptor
- Corotron, scorotron, or dicorotron
- Power supply

The charge placed on the photoreceptor can be either positive or negative. Most xerographic systems use positive charging, and that is what this manual will describe. The negative charging systems are based on the same principles and operate in a similar manner.

Since the scorotron and dicorotron are variations of the corotron, the general discussion will cover the corotron. The other two will be discussed at the end of the section.

Charging

A surface with less electrons than protons is positively charged. A surface with more electrons that protons is negatively charged. Therefore, to charge the photoreceptor positively, we need to remove electrons.

In the darkness, the photoconductive layer acts as an insulator. Electrons cannot be moved easily without using a tremendous amount of energy. Therefore, we utilize the air molecules immediately around the photoreceptor surface.

This diagram shows all the components used in the charging process.

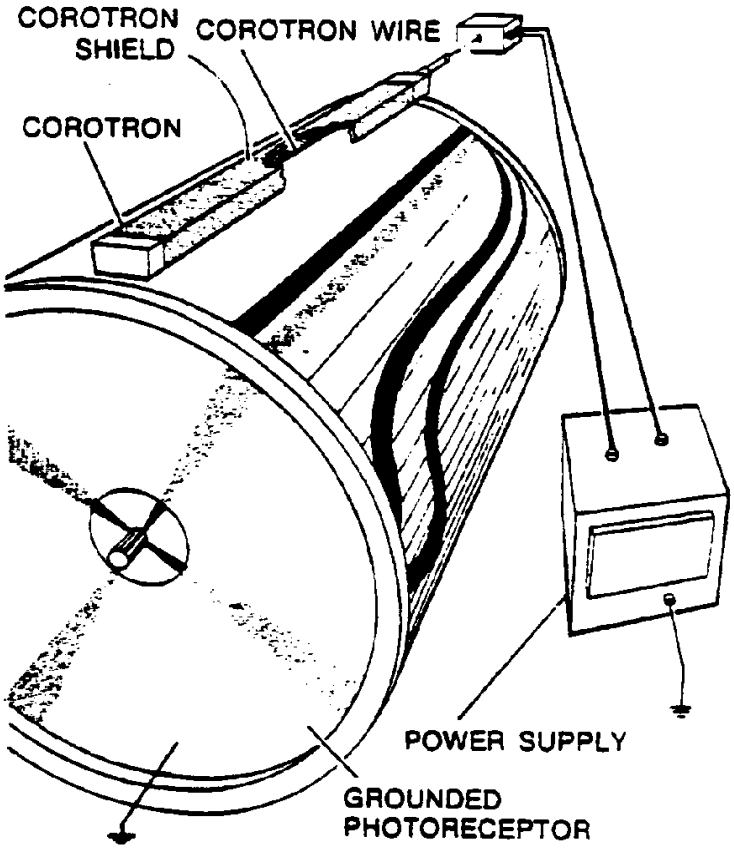

To initiate the charging process, some vehicle for charging the air around the photoreceptor is needed. This vehicle is called a corotron.

A corotron consists of a fine wire and a shield that encloses the wire on three sides. The corotron wire is made of a good conductor, usually tungsten or platinum. It is connected to a power supply. The power supply, the corotron shield, and the photoreceptor are all connected to ground.

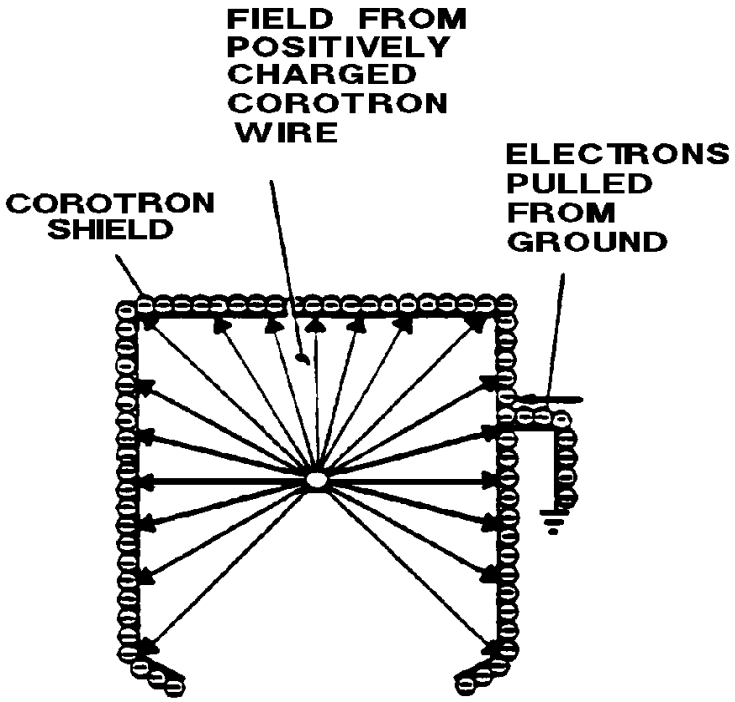

During charging, the power supply provides a large positive DC voltage to the corotron wire. The positive charge is so great that the electrons in the grounded corotron shield move to the inner surface of the shield. This causes a strong electrostatic field between the shield and the wire.

In this very strong field, free electrons in the air are attracted to the positively charged wire. (Remember that opposite charges attract.) As these electrons move, they collide with other air molecules with enough force to free electrons from the molecules. The air molecules are transformed into positive ions, and the free electrons also move toward the corotron wire. These new electrons collide with more air molecules. This creates more positive ions and frees still more electrons. This process, called ionization, continues until the air surrounding the corotron wire is saturated with positive ions.

This cloud of ions sometimes develops a glow called a corona. That is where the name corotron comes from.

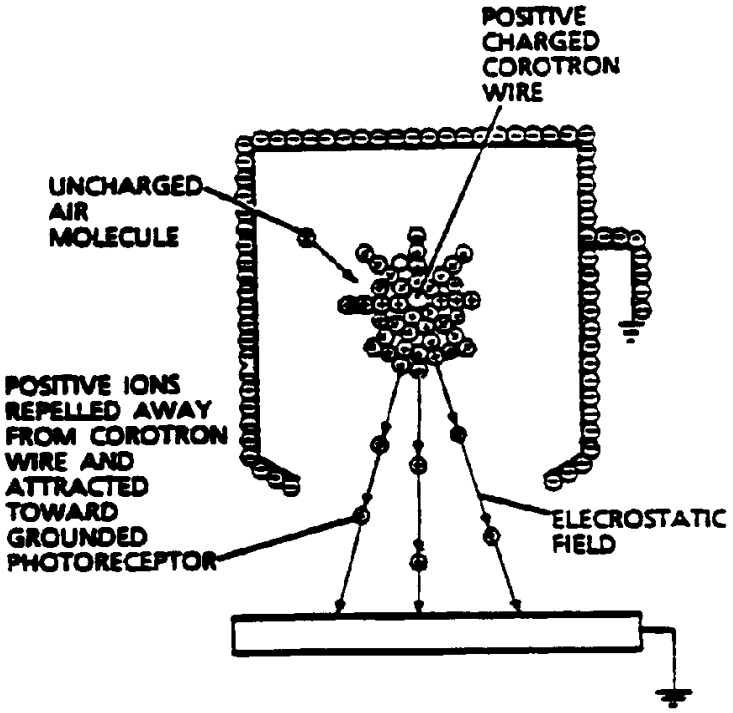

When the positive charge is applied to the corotron wire, a second electrostatic field is formed between the wire and the grounded photoreceptor. The field is not as strong as the field between the wire and the shield. It has a tremendous effect once the air around the wire is saturated with positive ions.

Both the positive ions and the corotron wire are positively charged. The positive ions closest to the corotron are repelled away from the corotron wire, toward the selenium surface of the grounded photoreceptor, along the electrostatic field between the wire and photoreceptor. The result is a positive charge at the surface of the photoreceptor.

The grounded corotron shield helps control the **strength** of the field between the corotron and the photoreceptor and the **direction** of the electrostatic fields.

The air molecules immediately surrounding the photoreceptor surface are positive ions. This layer of positive ions is in the trapping layer and is the positive charge on the photoreceptor. We need to ensure that the charge remains on the photoreceptor surface when the power to the corotron is removed. We also need to ensure that the positive charge is uniform. These require a grounded substrate.

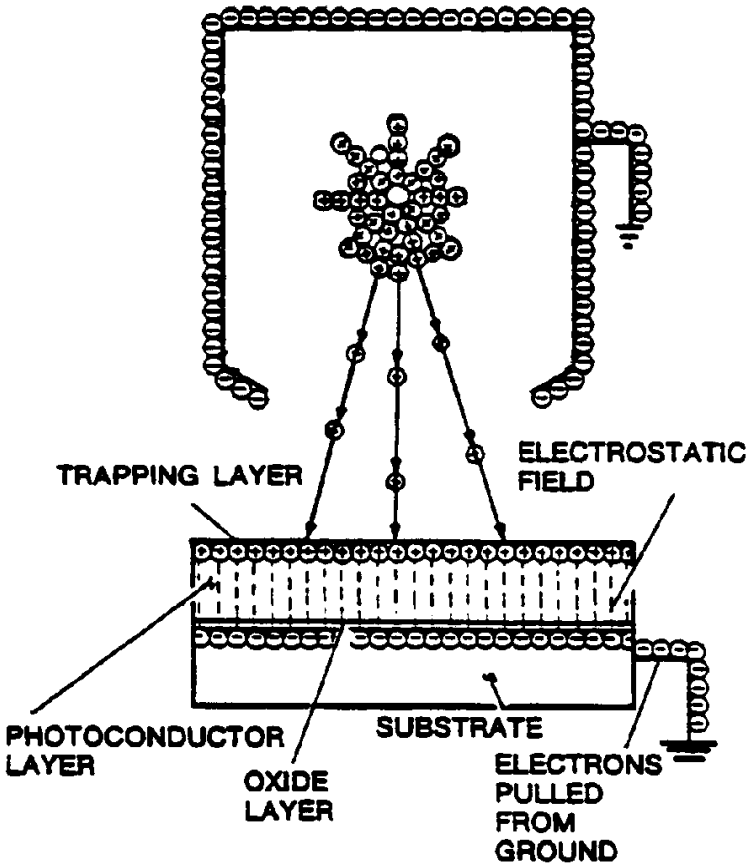

Recall that the substrate is a good conductor and that it is grounded. When the strong positive charge is induced on the photoreceptor surface, the substrate reacts to it. The electrons in the substrate move so that a negative charge sits at the edge of the oxide layer. This negative charge layer creates another electrostatic field with the positive surface charge. The photoreceptor grounding, through the substrate, supplies the extra electrons to the substrate to ensure the strength of the negative charge.

When the corotron is switched off and the field between the corotron and the photoreceptor is removed, the field between the positive charges and the substrate holds the positive charges in the trapping layer.

If the photoreceptor had to hold the positive charge for a long period of time, the charge would start to shift and lose its uniformity. However, the time between charging and exposing is very short. For that period of time, the substrate-charge field is strong enough to hold the charges in place.

Scorotron

A scorotron is another DC device that can be used to charge a photoreceptor. Think of it as a corotron with a wire grid over the open side of the shield. It works as a corotron does except that it is better able to control the uniformity of the charge. To do this, it has a grid of several thin wires between the corotron wire and photoreceptor. As the charge on the photoreceptor increases, more lines of force are deflected into the grid. Less ions flow to the photoreceptor. Eventually, all of the ions are attracted to the grid, and no further charging occurs.

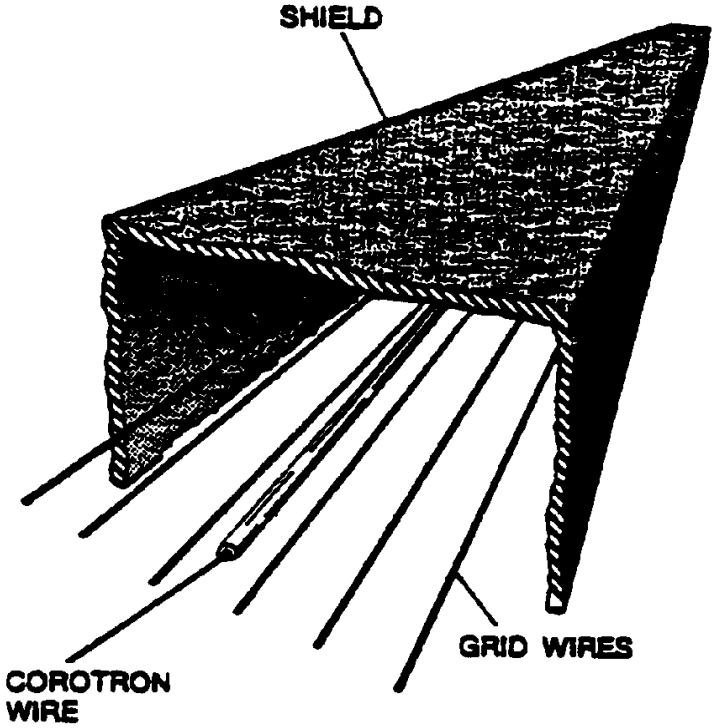

Dicorotron

Like the corotron, the dicorotron is made of a wire surrounded by a shield. However, the dicorotron has an additional shield inside the outer shield. The dicorotron wire is supplied with alternating current (AC). The wire produces both positive and negative ions. The inner shield is supplied with direct current (DC). The inner shield can be adjusted to control the amount of positive ions and negative ions produced by the wire.

Depending on whether the bias on the shield is positive or negative, the dicorotron will produce an excess of either positive or negative ions. Therefore, the dicorotron can be used for negative charging as well as positive charging.

Because of the inner shield, the charge rate can be easily changed, making the dicorotron ideal for self-regulating systems. Also, the dicorotron produces a more even charge than either the corotron or the scorotron.

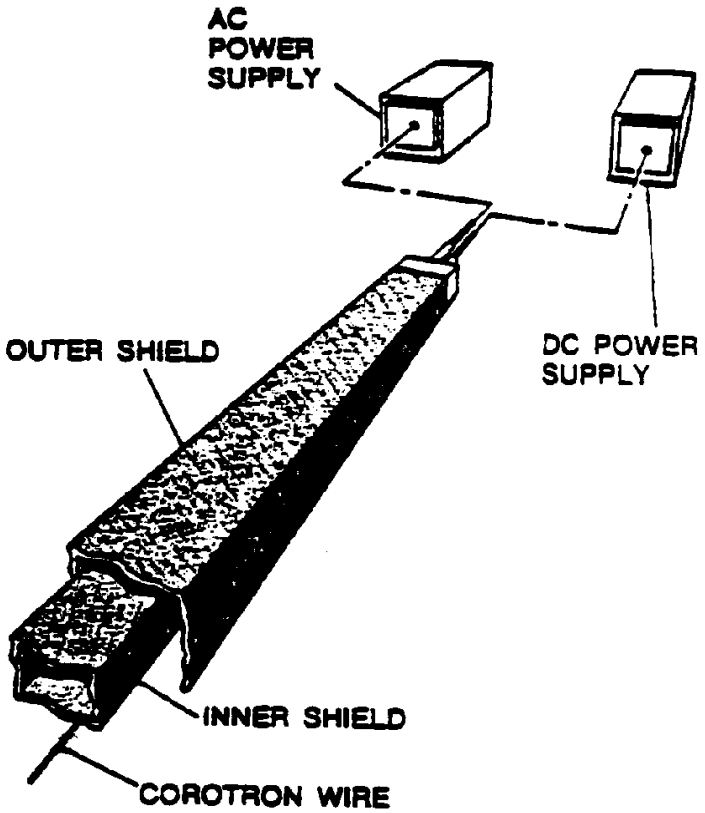

This page was intentionally left blank.

Review

1. Which of the following components are involved in electrostatic charging?

a.	Transformer	e.	Corotron wire
b.	Photoreceptor	f.	Magnetism
c.	Light	g.	Corotron shield
d.	Power supply	h.	Corona

2. The corotron wire must be _____ during the positive charging of the photoreceptor.

   a. positive
   b. neutral
   c. negative

3. The _____ contains the positive ions.

   a. trapping layer
   b. photoconductor layer
   c. oxide layer
   d. substrate

4. The _____ contains the negative charges which hold the positive ions in place

   a. trapping layer
   b. photoconductor layer
   c. oxide layer
   d. substrate

5. Write scorotron or dicorotron as appropriate after each of the following.

   a. Has grid wires _____
   b. Has an inner shield _____
   c. Easily used for negative charging _____
   d. DC only _____

Review Answers

1. Which of the following components are involved in electrostatic charging?

   b. Photoreceptor

   c. Light

   d. Power supply

   e. Corotron wire

   g. Corotron shield

   h. Corona

2. The corotron wire must be _____ during the positive charging of the photoreceptor.

   a. Positive

3. The _____ contains the positive ions.

   a. Trapping Layer

4. The _____ contains the negative charges which hold the positive ions in place

   d. Substrate

5. Write scorotron or dicorotron as appropriate after each of the following.

a.	Has grid wires	Scorotron
b.	Has an inner shield	Dicorotron
c.	Easily used for negative charging	Dicorotron
d.	DC only	Scorotron

IMAGING

Introduction

In charging, a uniform positive charge was placed on the photoreceptor surface. Imaging is the first of two processes by which the charge on the photoreceptor becomes a replica of the original. The imaging and exposing processes work together to accomplish this replication. Imaging deals with the mechanism by which the original is projected onto the photoreceptor.

The purpose of the imaging process is to project an image of whatever is to be copied onto the photoreceptor surface. The image is in the form of reflected light. However, imaging is a lot more than simply placing a lens between the photoreceptor and what is to be copied. The image that is projected to the photoreceptor must have the following qualities.

- Proper size
- Correct positioning after projection
- Correct brightness
- Clear focus

The following machine parts are used for imaging.

- Platen glass
- Exposure lamp
- Lens
- Mirrors

These parts make up the optical system. Their relative positioning is critical to copy quality and to maintenance. The optical system is often used as the reference for all the machine timing.

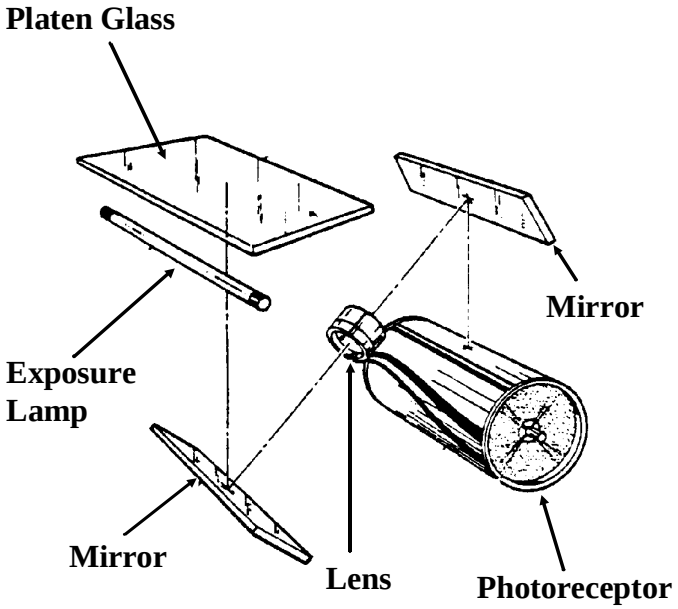

Platen Glass

The imaging step begins with placing an original document onto the platen glass. The platen glass is transparent so that the image shows through into the copier.

Since it is important for the image to be projected to exactly the right place on the photoreceptor, the platen glass has guides marking where originals should be placed on the glass. Locating the original in the right place is called image registration.

Exposure Lamp

For an original to be projected onto the photoreceptor, it must be illuminated by some light source. This light is provided by one or more exposure lamps.

Recall that the exposure lamp works with the spectral response of the photoreceptor to have a direct effect on the quality of the copy. Another factor is involved in the relationship: the spectral output of the lamp itself.

When we talked about white light, we said that it contains the entire spectrum of visible light. We assumed that the white light contained equal amounts of all the colors. This is not always true. Let's look at an example.

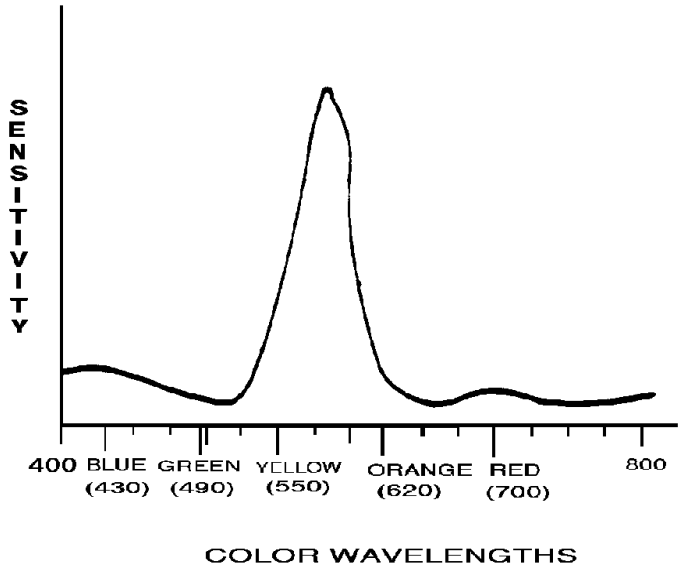

The spectral distribution of the exposure light, in conjunction with the spectral reflectance of the original, determines how much light is projected onto the photoreceptor.

We have a lamp which has very little blue light. For the photoreceptor to react to this weak blue light, its sensitivity to blue must be extremely high.

Our lamp also has a tremendous amount of yellow light, so the photoreceptor's sensitivity to yellow can be fairly low. Because so much yellow light is projected, the photoreceptor may still react.

Recall what we learned about the spectral response of selenium. Using our imaginary lamp with a selenium drum would be a disaster. Selenium is not sensitive to yellow light. The result would be no exposure.

The photoreceptor segments corresponding to the blue areas of an original would be discharged, since the selenium sensitivity to blue is strong.

The ideal light is one in which the spectral response of the lamp matches the spectral response characteristics of the photoreceptor. This ensures that the copy shows the image in the same relative densities as the colored original.

For the photoreceptor to receive the correct exposure, the projected image must vary in brightness, as does original. This is true even if the only conditions are pure white and pure black.

The lamps must be chosen very carefully. The intensity of the lamps must be carefully controlled.

The most common type of lamps used are frosted quartz halogen lamps. Quartz halogen lamps allow a flat spectral response. The amount of each color present in the light compensates for the different photoreceptor color sensitivities.

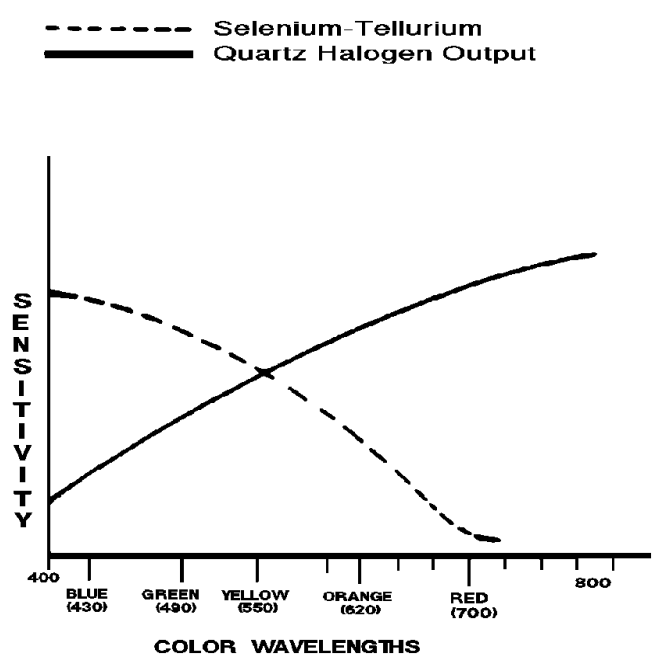

Thus, the photoreceptor is not subject to any tremendous variations in the amount of color projected in the light from the lamp.

Using a quartz halogen lamp slows the speed of the copier. The majority of the high speed copiers use xenon lamps. Xenon lamps have a flat spectral response and a fast exposure time. This fast exposure speed is crucial to high speed operations.

Lens

When the document is illuminated, the original reflects light in all directions. Something is needed to collect the reflected light and to focus it. This device is a lens.

The lens projects the light onto the photoreceptor. Positioning the lens is critical. This ensures that the image is focused. It also ensures that the size of the copy is accurate.

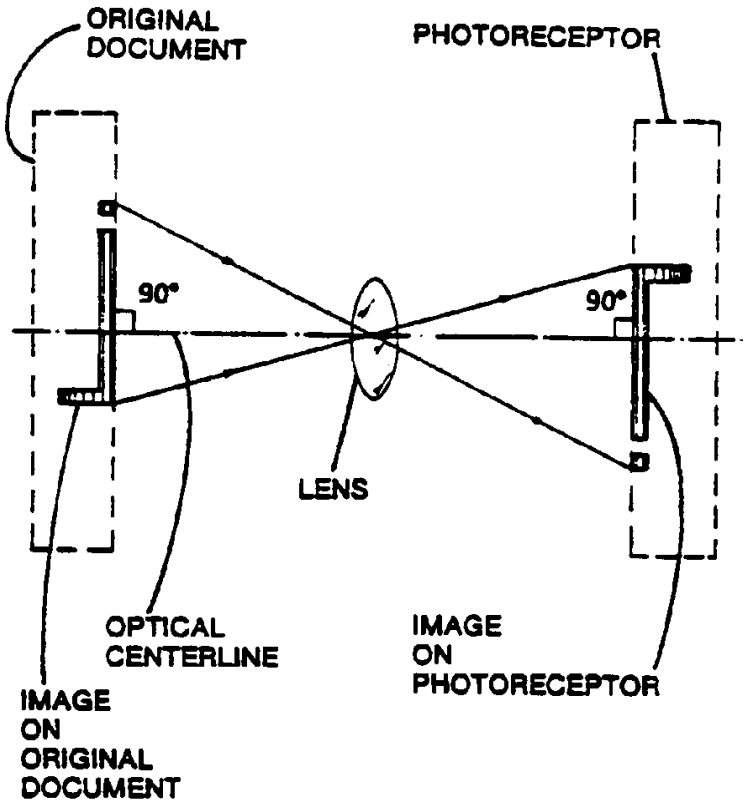

Positioning to ensure focus is based on the optical centerline. The optical centerline, sometimes called the principle ray, is an imaginary line drawn through the exact center of the lens. To ensure that the image is focused, the center line must also pass through the center of both the original and the image on the photoreceptor. The image registration (on the platen glass and on the photoreceptor) is dependent on the optical centerline.

The positioning to ensure size accuracy deals with the distance from the exact center of the lens, along the centerline, at which the original is positioned and the distance at which the image is projected.

For the image to match the size of the original, the lens must be exactly centered between the photoreceptor and the image. The ratio of the lens-original to lens-image distance changes for the different enlargements and reductions.

The lens used in a copier is a complex lens. Originally, the lens had to have two curved surfaces. The curvature of these surfaces had to be exact. These ground-glass copier lenses were extremely difficult and expensive to produce. Grinding was not always exact. Considerable adjustment was required when a new lens was installed in a copier.

Most copiers now use SELFOC lenses. SELFOC lenses contain no curved glass. The material in the glass ensures that the projected images are bent at the correct angle. SELFOC lenses reduce the amount of adjustment required for installing a replacement lens. They also reduce the manufacturing cost of the lens.

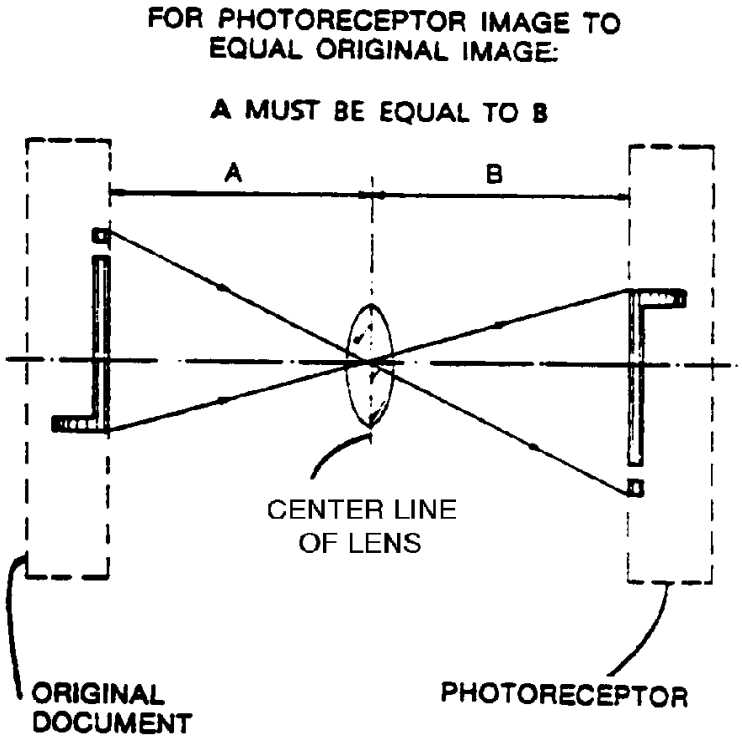

Mirrors

The lens is designed to focus a projected image of a specific size. To do this, a fixed distance is needed between the document and the photoreceptor. Usually, this distance is too long to follow a straight path. Mirrors are used to change the direction of the image until it has been projected the correct distance. The mirrors fold the long optical path so it will fit inside the machine.

To keep the image on the right path, the mirrors must be positioned very accurately--again, on the optical centerline.

The mirrors used in a copier are different from ordinary mirrors. Ordinary mirrors reflect from the inside of the rear surface because the reflecting surface is protected by glass. If that kind of mirror was used in a copier, the surface of the glass in front of the reflecting surface would cause unwanted reflections. The mirrors used in xerography are called first surface mirrors.

The first-surface mirrors require some special handling. First, the surface of this kind of mirror is easily damaged. Care must be taken not to scratch the reflecting surface. Second, the first surface must always face the image.

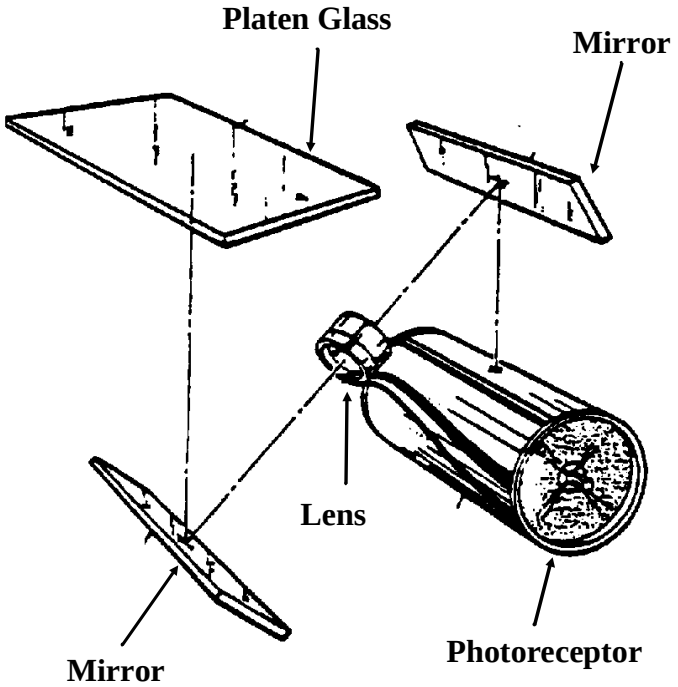

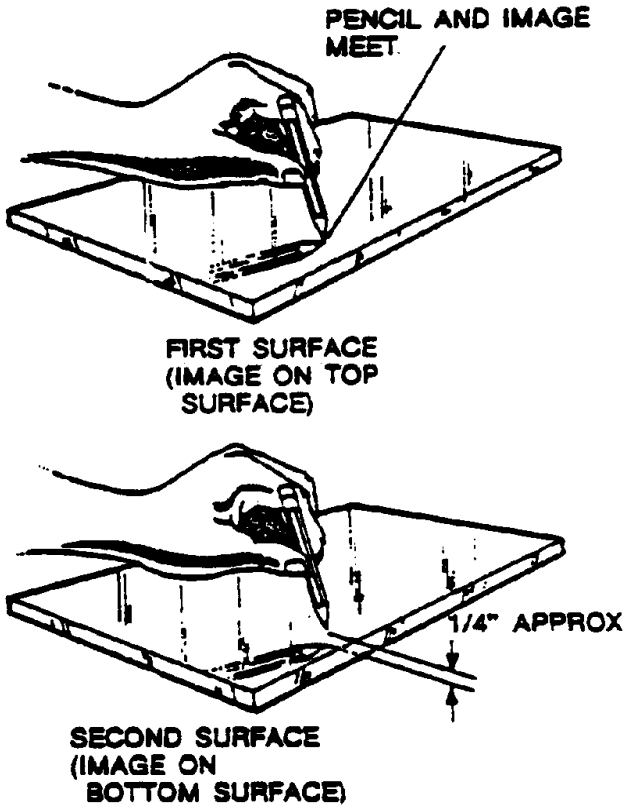

Stray Light

Any light that reaches the photoreceptor surface will discharge the drum. Therefore, it is important that no stray light enters the optical path. Stray light is sometimes called optical noise. It can be caused either by light that leaks into the photoreceptor cavity or by reflections from shiny surfaces in the cavity. Most copiers' optics cavities are painted with a flat black paint.

We have discussed all of the components involved in imaging. Most photoreceptors, however, are not flat. Therefore, the entire imaging process must conform to the shape of the photoreceptor.

Strip Scanning

The photoreceptor is usually a drum. As the drum rotates, only a segment of the drum is in the optical path. The image cannot be projected onto the curved surface all at once. The document is scanned a strip at a time. Strip scanning projects just a part of the image to the photoreceptor at one time. The scanning must be timed with the optical system and the photoreceptor rotation. This is called synchronization.

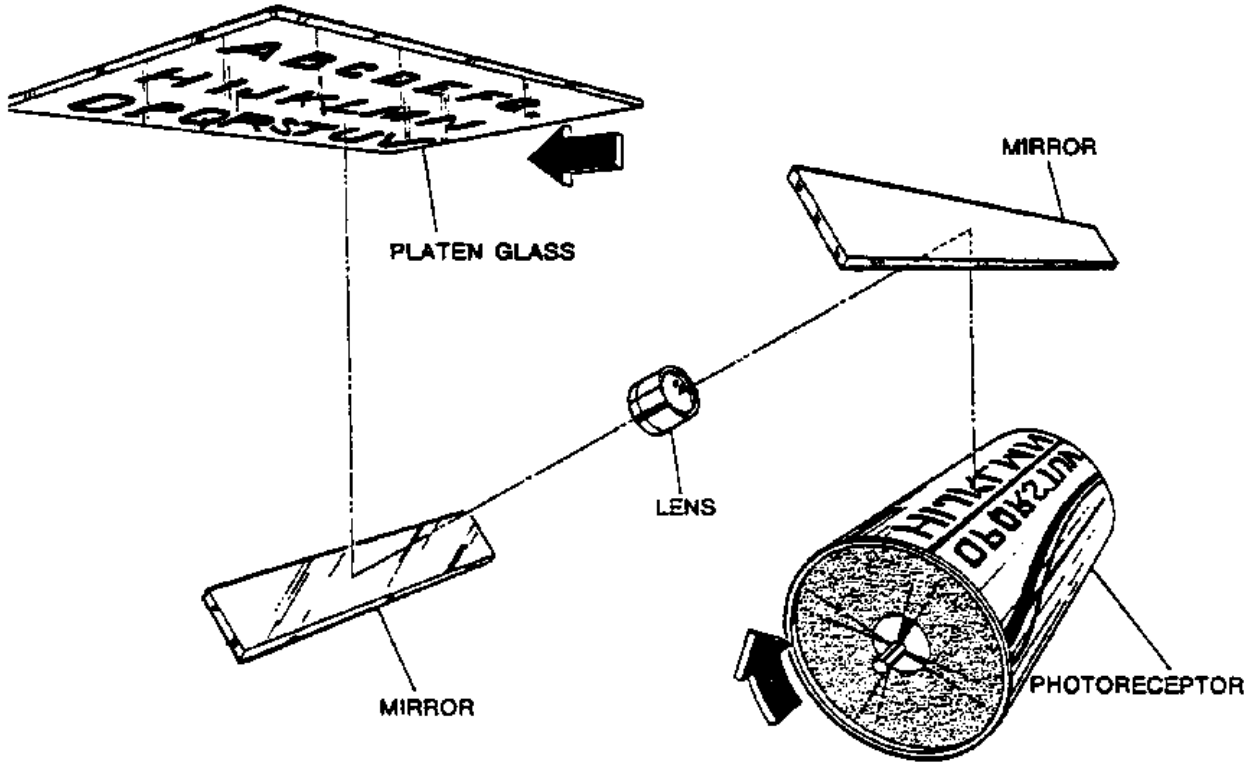

Several methods of strip-scanning exist. All of them involve some imaging component movement. The following are the four most common methods.

Method 1

The exposure lamps and lens move under the platen glass.

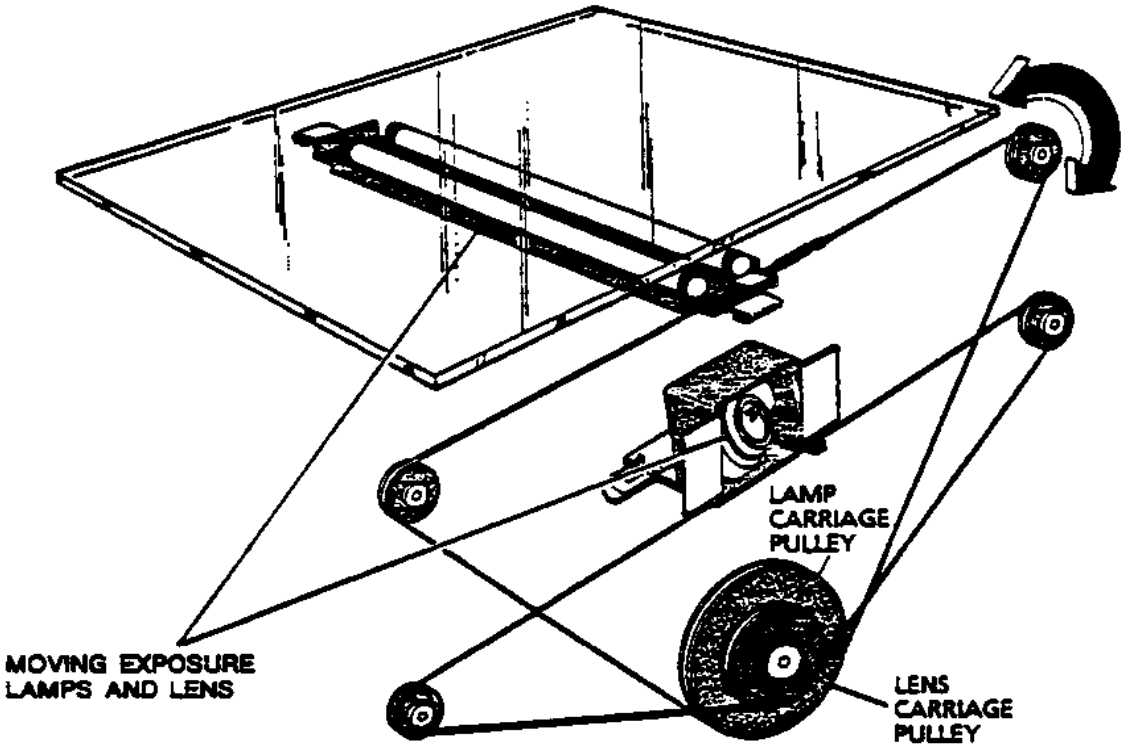

Method 2

The platen glass, with the original on it, moves past the exposure lamp and lens.

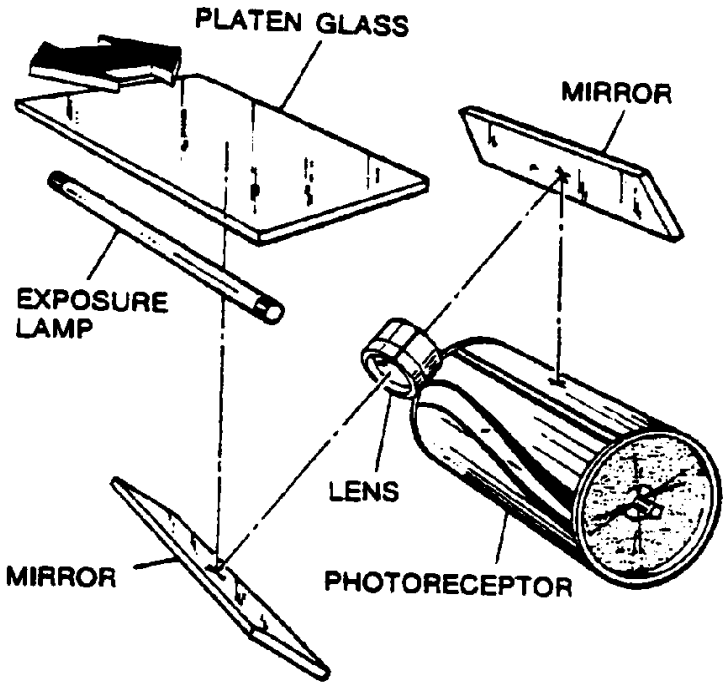

Method 3

The original document is wrapped onto a drum and revolved past a mirror.

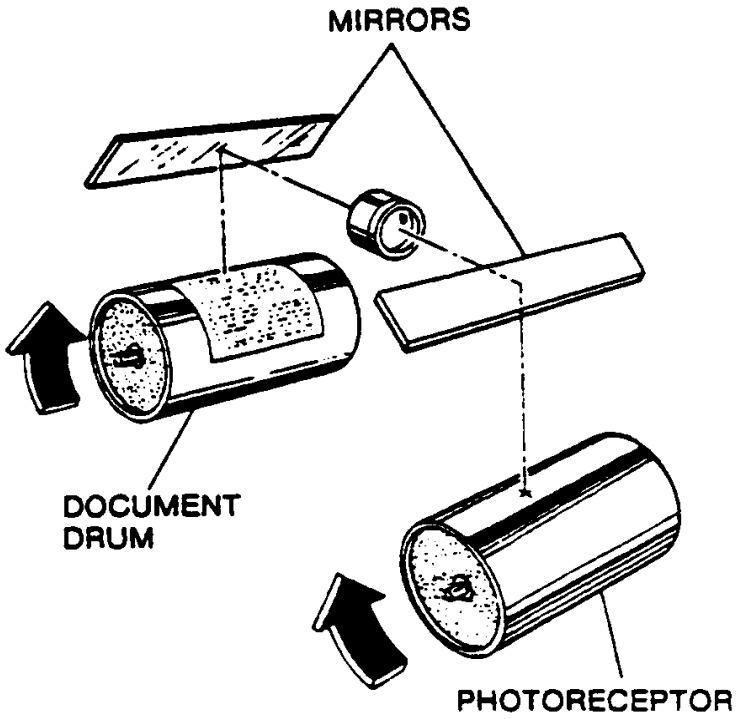

Method 4

The mirror rotates so that it reflects only part of the image at one time.

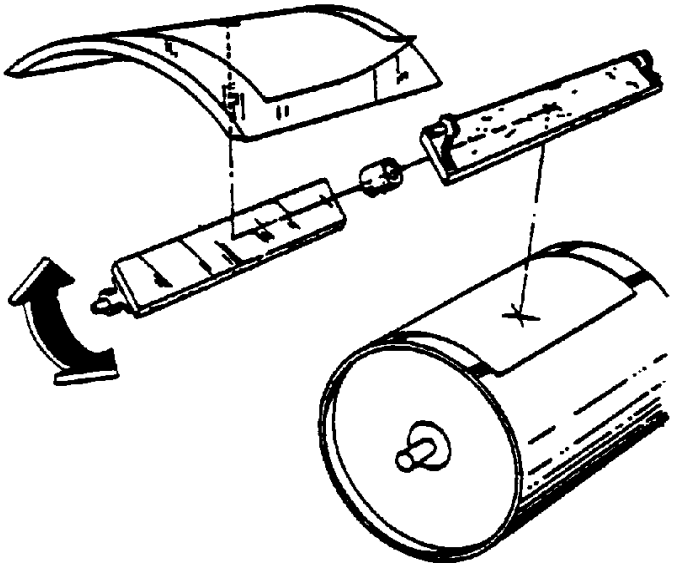

Flash Imaging

If the copier uses a photoreceptor belt, which has a flat surface, the image can be projected all at once. This is called flash imaging. Flash imaging is primarily used in the larger, high-speed copiers.

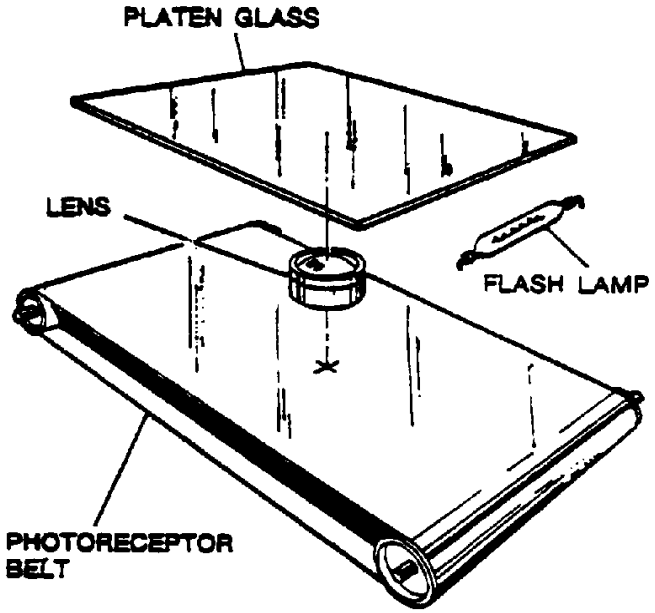

Review

1. Match the following

   a. Platen Glass
   b. Mirrors
   c. Flash Imaging
   d. Exposure Lamps
   e. Lens
   f. Strip Scanning
   g. Optical Centerline
   h. Optical Noise

____ Used to make the needed long optical path fit in the available small space

____ Used to illuminate the original document

____ Collects and projects the document image

____ Imaging a part at a time

____ Used to position the original document

____ Imaging all at once

____ Unwanted light in the optical path or on the photoreceptor

____ An imaginary line drawn through the exact center of the lens.
Used to ensure the correct focusing.

Review Answers

1. Match the following.

a. Platen Glass	Used to position the original document .
b. Mirrors	Used to make the needed long optical path fit in the available small space.
c. Flash Imaging	Imaging all at once.
d. Exposure Lamps	Used to illuminate the original document.
e. Lens	Collects and projects the document image.
f. Strip Scanning	Imaging a part at a time.
g. Optical Centerline	An imaginary line drawn through the exact center of the lens. Used to ensure the correct focusing.
h. Optical Noise	Unwanted light in the optical path or on the photoreceptor.

EXPOSING

Introduction

Imaging is the process by which the original is projected onto the photoreceptor. Exposing covers the control of the time length that the image is projected onto the photoreceptor, as well as the actual photoreceptor discharge process.

Although we talked about seven distinct processes of xerography, the time required to complete all seven is quite small; in fact, less than one minute. This means that whenever we talk about time factors, be it exposure time or the length of time that the latent image remains on the drum, we are talking about seconds or fractions of seconds, not long amounts of time.

Photoreceptor Discharge

Let's start with the condition of the photoreceptor before it is exposed to light.

The positive charge in the trapping layer is held in place by means of the negative charge in the substrate. Because the photoconductor layer is still in its insulator state, the electrons in the selenium have not moved much. In fact, the electrons have repositioned themselves within their own molecules, but they have not left their molecules. This repositioning is called polarization.

When the drum is charged and the selenium molecules are polarized, electrostatic fields exist among the polarized molecules as well as between the positive charge and the negatively charged substrate.

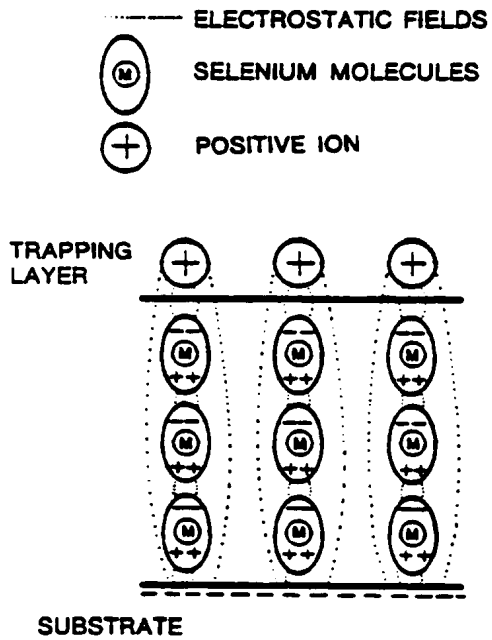

What happens when the photoreceptor is exposed to light? We will look at one spot on the photoreceptor, from the positive ion to the substrate, and we will explain the process in stages. Remember that the entire process is almost instantaneous.

The photoconductive layer acts as a conductor as soon as it is exposed to light. This means that the electrons in the selenium layer can move easily.

When exposed to light, the electrons in the selenium molecule closest to the trapping layer move out of the molecule toward the positive ion. This electron movement neutralizes some, but not necessarily all, of the positive ions. At the same time, the top molecule is left positively charged. The lack of electrons in the molecule is sometimes called a hole.

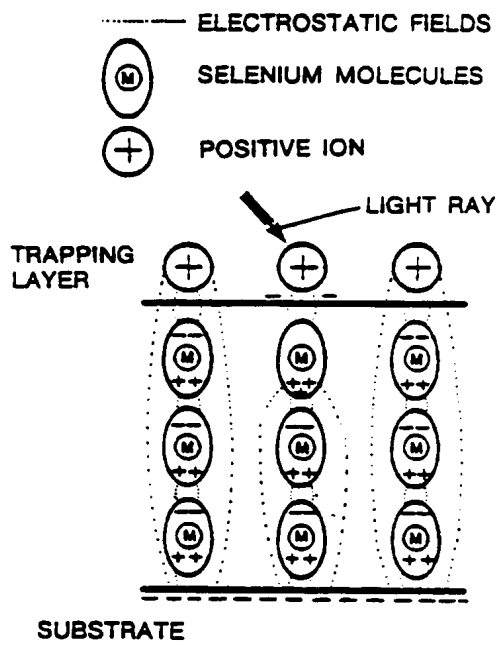

Now, the strong electrostatic field has shifted. It is no longer between the positive ion and the substrate. It is now between the top molecule and the substrate.

The electrons immediately below the top molecule react to the positive charge. They migrate up to the top molecule to neutralize some of the charge.

This migration causes the positive charge to move from the top molecule to the second molecule. Again, the strong electrostatic field has shifted. It is now between the second molecule and the substrate. The hole has moved from the top molecule to the second molecule as well.

This migration of electrons continues until the hole is on the molecule closest to the substrate. At this point, electrons move from the substrate into the photoconductor to neutralize this last positive charge.

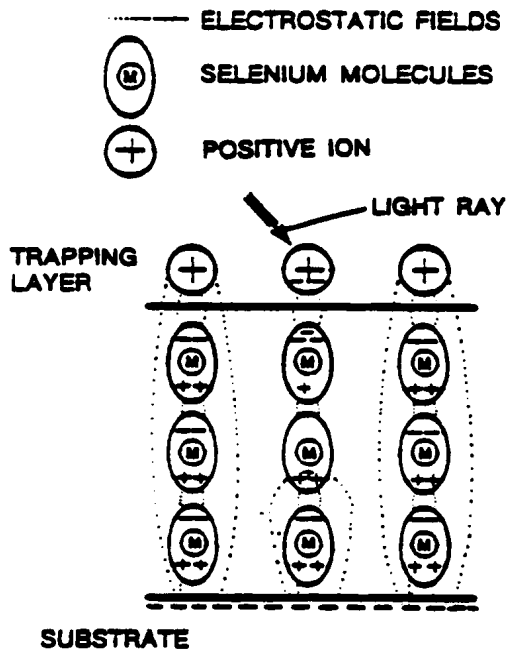

The electrons can move from the substrate to the photoconductor layer for two reasons. First, the substrate is a very good conductor. It can move electrons with no trouble at all.

Second, the force resulting from the very strong field between the last selenium molecule and the substrate is enough to overcome the effects of the oxide layer. Remember that the oxide layer is not a perfect conductor. It prevents electrons from passing casually from the substrate to the photoconductor (during charging, for example).

The substrate, in turn, draws electrons from ground to maintain its electrical neutrality.

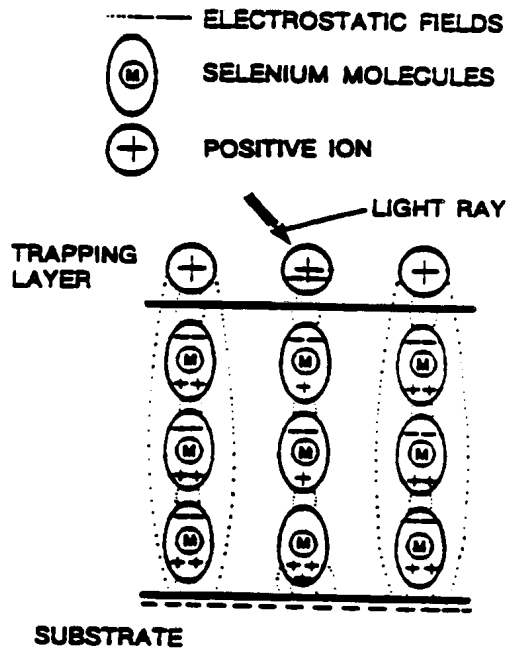

Exposure Time

Now our spot on the photoreceptor has a reduced positive charge compared to the spots around it. If light continues to be projected onto the spot, the positive charge will continue to be reduced through the same process. In order to ensure that the density of the copy accurately matches the density (or colors) on the original, all areas of the drum must be exposed an equal amount of time.

This is easy in systems using flash imaging, where the entire original is projected onto a flat photoreceptor at one time. The exposure is controlled by the length of one flash.

Systems based on strip scanning (systems with photoreceptor drums) require careful control of the exposure time. A device called an exposure slit is used to control the length of time each portion of the image is projected onto the photoreceptor. The width of the slit determines the exposure time.

As the photoreceptor rotates at a constant speed, the image is projected at the same speed. The time it takes to sweep from one side of the slit to the other, and therefore the time the image is actually projected onto the photoreceptor surface, is the exposure time. The narrower the slit, the less the exposure time. The wider the slit, the longer the exposure time.

Some exposure slits are wider at the ends than at the center. This compensates for exposure lamps that are brighter in the center than at the ends.

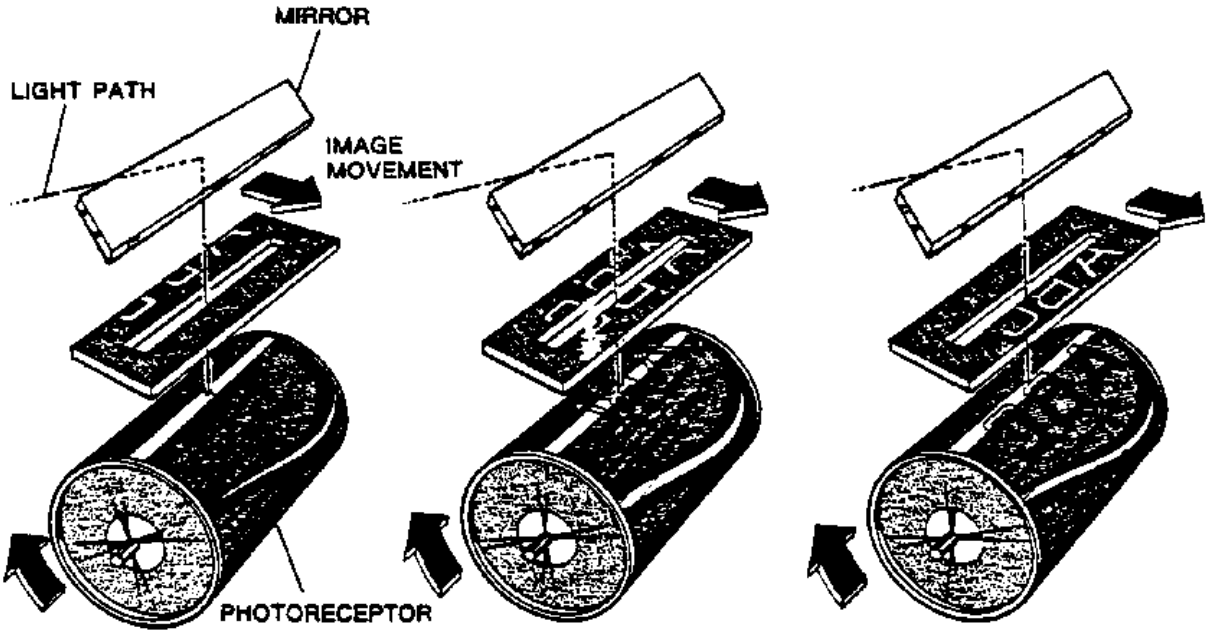

Edge Erase/Interdocument Erase

When charging the photoreceptor, it is not necessary to charge an area any larger than the copy to be made. However, with the various copy paper sizes available and with the reduction modes often used, it would be expensive to design a system that adjusted the charging area for each size copy. Therefore, one large area of the photoreceptor is charged, regardless of copy size. Then, depending on the size of the copies to be made, unused portions of the charged areas are erased before the development step.

This erasing step eliminates the developing and the cleaning of toner in areas where toner is not needed. A light source is used to provide the erase function. The light removes the positive charge from the photoreceptor surface just as it did in the exposing step. Erase lamps are used to discharge areas around the copy area and to discharge the space between copies on the photoreceptor.

Summary

The following has happened so far.

- Charging

  First, an even charge is placed on the photoreceptor surface by the corotron.

- Imaging

  The illuminated image is reflected, by the mirrors and through the lens to the photoreceptor.

- Exposing

  The lighter areas of the original document reflect more light to the photoreceptor, and therefore discharge more in those areas.

What we now have is a photoreceptor surface that remains charged wherever the original document was black. There is less charge in other areas. This corresponds to the shade or density of areas on the original document. The photoreceptor surface at this time does not look any different than before it was charged, but it is different. The difference is electrostatic. The structure of the atoms in the photoreceptor have been changed electrically. Although the change is not visible, the locations of the electrical charges duplicate the variations in density of the original document. The invisible image is known as a latent image.

This page was intentionally left blank.

Review

1. Which of the following steps take place during typical exposing?

   a. The photoreceptor is charged positively.

   b. The whole photoreceptor surface is flashed with a bright light.

   c. The length of exposure time is controlled.

   d. Part of the photoconductive layer becomes a conductor.

   e. Electrons, which are negative, join with the protons, which are positive, in the exposed area.

2. Match the following terms with the definitions

   a. Exposure slit

   b. Exposure time

   c. Latent image

   d. Edge Erase/Interdocument Erase

   ____ Invisible image which duplicates the original

   ____ Exposing the unused portions of the photoreceptor

   ____ Length of time each portion of the image is projected onto the photoreceptor

   ____ Device used to control exposure time

Review Answers

1. Which of the following steps take place during typical exposing?

   c. The length of exposure time is controlled.

   d. Part of the photoconductive layer becomes a conductor.

   e. Electrons, which are negative, join with the protons, which are positive, in the exposed area.

2. Match the following terms with the definitions

a.	Exposure slit	Device used to control exposure time
b.	Exposure time	Length of time each portion of the image is projected onto the photoreceptor
c.	Latent image	Invisible image which duplicates the original
d.	Edge Erase / Interdocument Erase	Exposing the unused portions of the photoreceptor

DEVELOPING

Introduction

During the exposing process, charge is removed from those areas on the photoreceptor which correspond to the non-image areas of the original. The result, called the latent image, is an invisible replica of the original. The purpose of the developing process is to make that latent image visible with a material which can then be transferred onto the copy paper. The material which makes the image visible is called toner.

What follows is a simplified explanation of the developing process.

The toner is mixed with another material, called carrier, in a developer sump. When these two dissimilar materials, jointly called developer, come in contact with and rub against each other, the carrier takes on a positive charge and the toner takes on a negative charge. In the developer sump, the toner and carrier are constantly mixed mechanically. The electrostatic charge formed between the toner and the carrier bead coating cause the toner to cling to the carrier.

The developer is transported to the photoreceptor surface mechanically. When brought close to the surface, the toner particles are attracted to the very strong positive charges on the photoreceptor surface.

In the photoreceptor areas with the strongest charge, lots of toner moves from the carrier to the photoreceptor. In the areas with a weaker charge, only some of the toner shifts. In the photoreceptor areas which are not positively charged, no toner shifts from the carrier to the photoreceptor.

After the toner has been moved to the photoreceptor, the depleted carrier is moved mechanically back into the developer sump. In the sump, any remaining charge on the carrier is neutralized, and toner is again mixed with the carrier. If necessary, more toner is added to the mixing process.

The developing process calls for more components than any other process in xerography. The toner storage area, the developer sump, the mechanism for transporting the developer to the photoreceptor and back to the sump, and the mechanism which controls the replenishment of toner are all contained in the developer housing.

The developing process is based on electrostatics. What follows is a detailed explanation of the two-step electrostatic process. The first step is charging the toner and carrier. The second step is shifting the charged toner from the carrier to the photoreceptor.

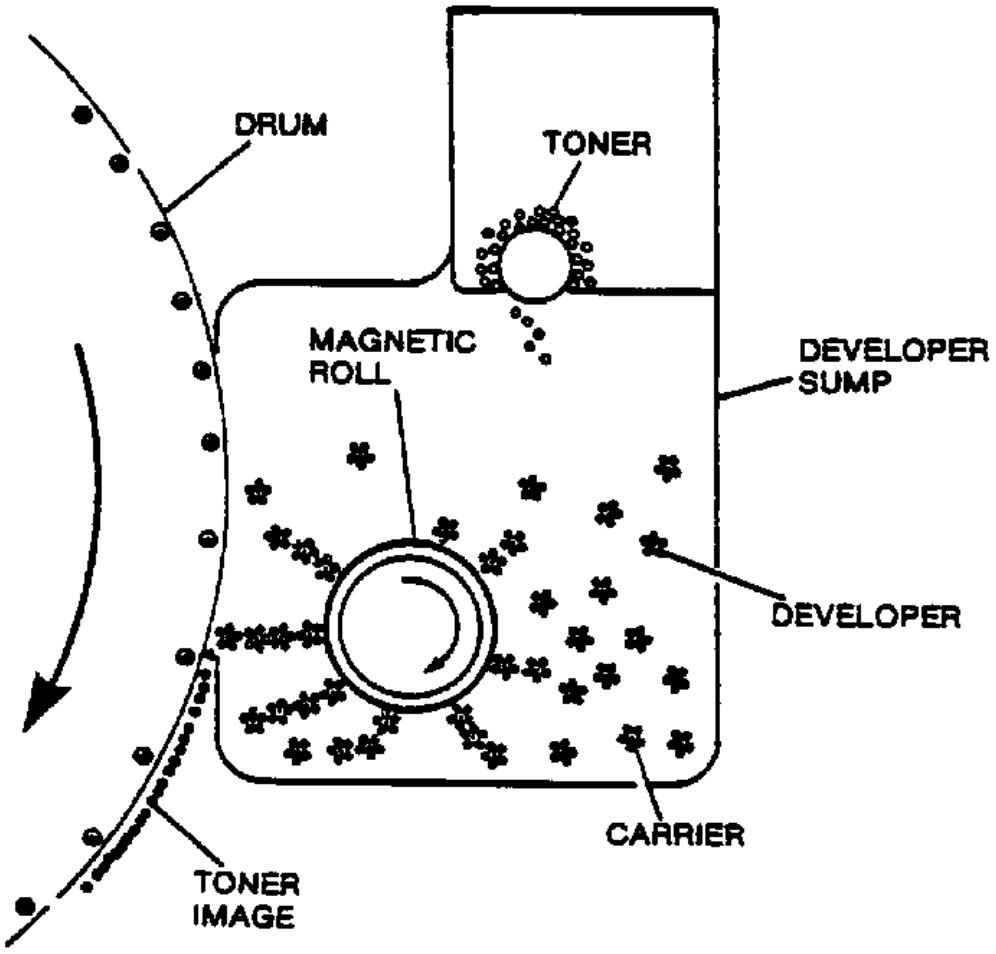
DRUM
TONER
MAGNETIC
ROLL
DEVELOPER
SUMP
DEVELOPER
CARRIER
TONER
IMAGE

Electrostatics of Developing

During charging, a corotron is used to induce the charge on the photoreceptor. In developing, a special property of dissimilar materials, called triboelectrification (or contact electrification) is used to induce the charge on the toner and the carrier. In triboelectrification, two materials become electrically charged with opposite polarities when they are mixed together.

An example of this is combing your hair on a dry day. The comb takes on one polarity, and your hair takes on the other. As a result, the strands of your hair are attracted to the comb.

The same principle applies when toner is mixed with carrier. The toner and carrier become charged with opposite polarities, and the toner clings electrostatically to the carrier beads. This force is just strong enough to hold the toner to the carrier. Since the toner particles are so much smaller than the carrier beads, many toner particles cling to each carrier bead in order to make the toner-carrier combination electrically neutral.

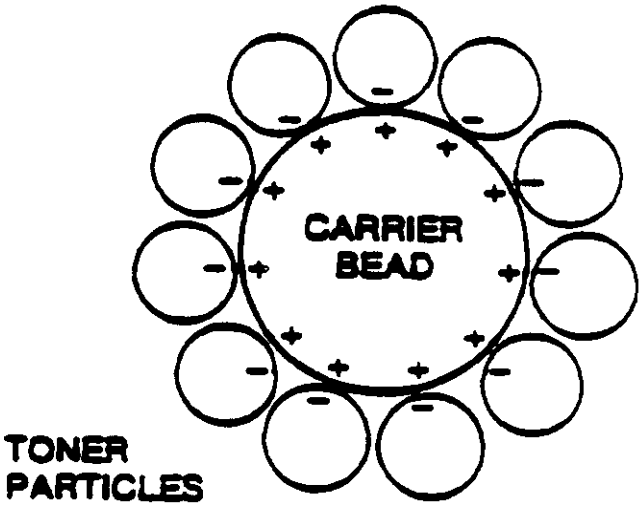

The toner must also cling to the photoreceptor surface. Thus, the toner charge must be the opposite of the photoreceptor charge. The carrier charge must be the same as the photoreceptor charge.

At the end of the first step, the developer consists of positively charged carrier beads completely coated by negatively charged toner. Now the toner needs to be shifted to the photoreceptor.

Remember, the photoreceptor is not uniformly charged right now. It has areas of high positive charge, corresponding to the image areas of the original. It also has areas of extremely low or no charge, corresponding to the non-image or background areas of the original.

The developer is transported mechanically to the photoreceptor surface. When the negative toner comes in contact with, or near, the positive charge on the photoreceptor, another electrostatic force is formed. The strength of this force depends on the strength of the positive charge of the photoreceptor.

The positive charge in photoreceptor image areas is stronger than the positive charge on the carrier. Thus, the toner clings to the photoreceptor surface, leaving the carrier.

For the photoreceptor areas of extremely low or no charge, the force between the surface and the toner particles is not great enough to pull the particles from the carrier beads. No toner clings to these areas of the photoreceptor.

Toner is now firmly held to the photoreceptor in the image areas. No toner is held to the areas corresponding to the background. The latent image is now visible.

Occasionally, there may be enough charge in the non-image areas of the photoreceptor to cause a little bit of toner to cling to the photoreceptor. This causes an overall grayness on the copy where there should be no developed image.

One last step is needed to ensure that the background has no excess toner. A low positive charge, stronger than the charge in the non-image areas of the photoreceptor, is moved close to the photoreceptor. The toner particles, attracted by the stronger electrostatic force, leave the non-image areas free of toner.

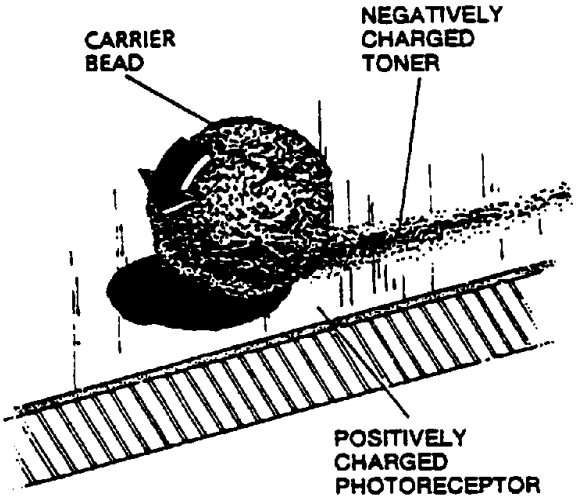

Developer Materials

The relative levels of charges on the toner, the carrier, and on the photoreceptor are critical. The most important means of controlling these charges is by using the developer materials designed for the given copier. Two factors are critical; the size of the toner particles and carrier beads and the extent and kind of charge generated on each during triboelectrification. We will refer to the charge generation characteristic as the tribo factor.

This discussion covers the two-component developing system. This system has a carrier which is distinct from the toner, and is found in most copiers. Some copiers, many of which do not have selenium-based photoreceptors, use a one-component system. The developing process in these copiers is slightly different and will be discussed later.

Toner

Toner produces the visible image on the photoreceptor. It consists of a substance (called a polymer or resin) with a specific tribo factor and a color agent. Since toner is transferred and fused to the copy paper, it must have the right melting point. When subjected to the fusing process, the toner must be able to flow into the copy paper with the right consistency.

As we said earlier, toner is made of extremely fine particles. For every kind of toner, there is an optimum particle size which is directly related to the carrier being used and to the mechanism for transporting the developer to the photoreceptor.

Carriers

The carrier consists of large, roughly spherical particles or beads. These carrier beads may be made from any one of a variety of materials such as sand, steel, or glass. The beads are coated with a resin material. The resin, like the toner, has a specific tribo factor which determines the extent and polarity of the charge.

Remember that the tribo factors of the carrier and the toner must ensure that the carrier always takes on a charge opposite to the toner. If factors result in the same polarity on both, toner will not cling to the carrier and will not be carried to the photoreceptor.

The charge on the carrier and the toner must be carefully controlled. This is done by considering the tribo factors of both.

If the charges are too small, toner will not be held strongly to the carrier beads. Some toner will not hold on the carrier long enough to travel to the photoreceptor. The toner that does reach the photoreceptor will be attracted to the weaker charge areas (non-image areas). As a result, the contrast on the copies will be light.

Likewise, too strong a force between the carrier and the toner results in lighter images. The strong force prevents toner from shifting to the photoreceptor.

The amount of charge depends on the tribo factor of the resins used in the toner and carrier. Which resin is used, which determines charge level and polarity, depends on the charging on the photoreceptor. With a positively charged drum, the resin used must ensure that the toner charge is negative and that the carrier charge is positive.

The carrier beads are (generally) several times larger than the toner particles. Many particles of toner can cling to each carrier bead. The relative size of the carrier beads and the toner particles is also critical. Each toner-carrier combination has an optimum size ratio.

Toner Concentration

When someone is talking about copy quality, you may hear the phrase toner concentration. Toner concentration is the ratio of the weight of the toner to the weight of the carrier in the developer sump. For toner concentration to be a valid measurement, the assumption is made that the toner and carrier are matched correctly. This means that the toner particle size is correct, that the carrier bead size is correct, and that the materials of both have the correct tribo factors.

In addition, the distribution of toner particles and carrier beads in the developer sump must be uniform. The uniformity is maintained by the mixing auger and any special mixing baffles.

Given these assumptions, the best toner concentration is the one that has just enough toner to completely coat the carrier beads.

When the toner concentration is too high, loose toner can either land on the photoreceptor in areas where it is not wanted, such as the non-image areas, or it can float onto machine components and cause dirt problems.

When the toner concentration is too low, the developed image will be light and the uncoated carrier beads may stick to the photoreceptor surface.

When a copier is installed, developer with the correct toner concentration is added to the developer sump. As copies are produced, the toner is depleted, changing the toner concentration. The optimum toner concentration is maintained by adding toner to the developer sump in a process called toner dispensing.

Periodically, the developer as a whole must be changed; the current developer is removed from the sump, and new developer, at the correct toner concentration, is added to the sump.

Toner Dispensing

After depositing toner onto the photoreceptor surface, the carrier beads, minus some toner, are returned to the developer sump. When the beads enter the sump, they change the toner concentration. When the concentration drops below the acceptable range, toner is added to the sump from a toner storage container. As soon as the new toner enters the hopper, it is subject to triboelectrification. The new toner will then cling to the carrier beads.

Toner Dispensing Control

For toner dispensing to work, a method for determining when toner should be added is needed. This can be determined by monitoring the toner concentration, sometimes called automatic toner dispensing. Toner dispensing may also be set by a predetermined use factor, known as manual control.

In systems with manual control, the toner is dispensed for a certain amount of time during a given time period. For example, toner might be dispensed for one minute with every ten minutes of copier use.

The rate at which toner is dispensed is determined by a logic algorithm when the machine is built. This algorithm is based on the speed of the copier and how much toner is used for an average density original.

Occasionally, the logic algorithm can be overridden. Some machines have a lever which adjusts the amount of time during which toner is dispensed or adjusts the time period between dispensing. This new algorithm stays in effect until the lever is adjusted again or for a fixed amount of time, after which the original algorithm takes over.

In automatic dispensing systems, the monitoring is done electronically. The monitoring process, usually called automatic density control (ADC), can take place either in the developer housing or on the photoreceptor itself.

The ADC in the developer housing measures the developer in the developer sump. The sump is where the toner and carrier are mixed. When the concentration is too low, a signal is sent to the toner dispenser mechanism to dispense more toner.

Monitoring on the photoreceptor involves a patch test. The system develops a patch on an unused part of the photoreceptor while a copy is made. The density of the patch is checked electronically. The toner dispenser is automatically adjusted to supply toner as necessary.

Toner Dispensing Mechanism

Once the system has determined that toner is needed in the developer sump, toner is mechanically added from a storage area, sometimes called a toner hopper.

The toner mechanism must ensure that toner is added only when the mechanism is activated. For this reason, the actual toner dispensing mechanism is usually a roll which fits very snugly in the bottom of the toner hopper. When activated electrically, the roll turns allowing a controlled flow of toner into the developer sump. Most toner rolls are made of foam. Some are aluminum with specially shaped notches.

Developer Transport Systems

We have concentrated on the first part of the developing process. Now we will discuss how the developer gets to the photoreceptor and how the amount of developer to come in contact with the photoreceptor is controlled.

The most common transport system, called magnetic brush developing, will be discussed in some detail. A second system, cascade developing, is also discussed, but in lesser detail.

Magnetic Brush Developing

In magnetic brush developing, a hollow tube or roll containing fixed magnets is used to move the developer to the photoreceptor. As the tube rotates around the magnets and through a sump of developer, the magnets cause the metallic carrier beads to adhere to the roll. The carrier beads closest to the roll become magnetized, enabling more carrier beads to stick. As a result, the carrier beads build upon each other to form bristles (like a brush).

The force created by the magnetic roll is just enough to allow the developer to build up on the roll. It has little effect on the charge on the toner or on the photoreceptor.

As the roll or tube continues to rotate, it moves the developer brush past a baffle, also known as a metering blade. The metering blade limits the length of the brush by knocking off the bristle portions beyond a certain length. This ensures that just the tip of the brush touches the photoreceptor.

Once past the blade, the bristles carry toner to the latent image where the negative toner particles are attracted to the positively charged image areas.

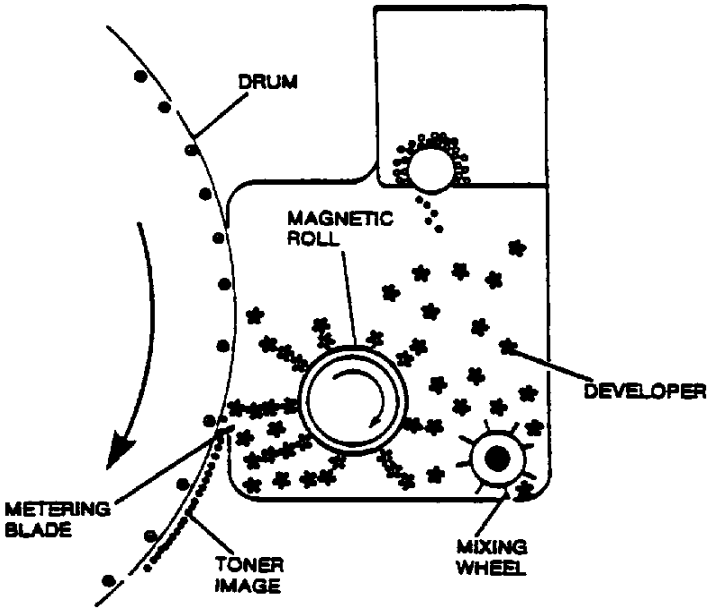

Biasing the Magnetic Roll

Whenever an original has large, solid image areas, a special developing problem results. In the exposing process, the centers of the solid areas end up with a slightly lower charge level. For the toner to be spread evenly across the solid areas, the electrostatic field in the center of the solid area has to be adjusted. This adjustment is accomplished by generating another electric field.

In magnetic brush developing, a positive DC voltage is applied to the magnetic roll for this purpose. This process, called biasing the magnetic brush, is carefully controlled. The bias voltage is designed to strengthen the solid areas without affecting other areas of the image.

Biasing the magnetic roll also helps prevent toner clouding. Even when toner concentration is optimized, some toner and carrier can be separated by mechanical force. This creates a cloud of loose, charged toner. The toner cloud is attracted to the non-image areas of the drum, resulting in background problems. The toner can dirty the inside of a copier.

Raising and lowering the bias voltage is also used to enhance copy quality.

Imagine an original on yellow, instead of white, paper. The background areas of the photoreceptor will have enough charge to attract some toner from the carrier.

By increasing the bias voltage, the force between the carrier and the toner is increased. A greater charge is needed on the photoreceptor to attract toner from the carrier. As a result, the amount of toner that shifts to the non-image areas (the low charge areas) of the photoreceptor is decreased drastically.

At the same time, lowering the bias voltage can help copying from light originals. With a light original, the charge on the photoreceptor in even the darkest image areas may be lower. The lower bias voltage on the brush means that the toner-photoreceptor field strength does not have to be as high for the toner to shift from the carrier to the photoreceptor.

Single-Component Magnetic Brush Systems

Most systems with single-component developer also use the magnetic brush developing process. The process differs from two-component systems.

In single component systems, the developer consists of toner, but no carrier. The toner is made of particles of a magnetic material embedded in a resin. The magnetic material usually contains the color agents. The magnetic material in the toner reacts to the magnetic roll to form a brush of toner particles.

As the magnetic roll rotates, a voltage applied to the magnetic roll constantly changes between positive and negative. When the voltage is negative, the negatively induced charge on the toner cause toner to be repelled toward the photoreceptor. When the voltage is positive, the loose toner is attracted to the roll.

Cascade Developing

In cascade developing, the developer housing contains a supply of developer, a conveyer, and a toner dispenser. The conveyer carries the coated carrier beads to a chute that opens over the photoreceptor. The developer cascades over the photoreceptor surface. This happens in a sealed area, so that the toner and carrier do not escape. As the developer bounces and rolls over the photoreceptor surface, the negatively charged toner particles are attracted to the positively charged latent image. Then, the developer is collected back into the housing by a pickoff baffle.

Bias Baffle

The bias baffle is a metal plate with a high positive charge. This plate attracts any toner that clouds during the cascading process. Toner collected by the baffle is continuously wiped away by the cascading beads.

Developer Electrode

A developer electrode is a metal plate charged to produce an electrical field. Like biasing the magnetic roll, this electrode is used to improve solid-area development.

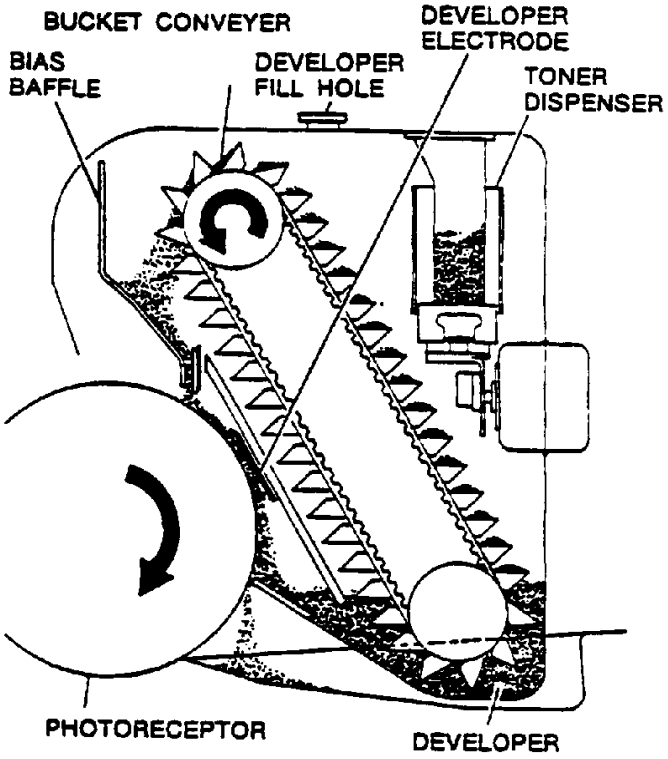

Summary

During the exposing process, charge is removed from those areas on the photoreceptor which correspond to the non-image areas of the original. The result, called the latent image, is an invisible replica of the original. The purpose of the developing process is to make that latent image visible with a material which can then be transferred onto the copy paper. The material which makes the image visible is called toner.

What follows is a simplified explanation of the developing process.

The toner is mixed with another material, called carrier, in a developer sump. This combination is called the developer. When the toner and carrier contact with each other, the carrier takes on a positive charge and the toner takes on a negative charge. In the developer sump, the toner and carrier are constantly mixed mechanically. The electrostatic charge between the toner and the carrier causes the toner to cling to the carrier.

The developing process calls for more components than any other process in xerography. The toner storage area, the developer sump, the mechanism for transporting the developer to the photoreceptor and back to the sump, and the mechanism which controls the replenishment of toner are all contained in the developer housing.

Review

1. Two-component developer is made up of _____ and _____.

2. The _____ is larger than the _____.

   a. toner particle
   b. carrier bead

3. When toner and carrier beads are mixed together, contact electrification occurs. This causes the toner and carrier to have _____ charges.

   a. like
   b. opposite

4. The toner must have a _____ charge, if the photoreceptor has a positive charge in the latent image areas after exposure.

   a. positive
   b. negative

5. After exposure, the electrostatic field tends to be stronger at the edges of solid areas. What is the name of the device that is used to help achieve even development over the whole area?

   a. Development corotron

   b. Edge erase lamp

   c. Developer electrode

6. In magnetic brush development, electrostatic fields involving the photoreceptor are created by magnetism.

   a. True
   b. False

7. During cascade development, the developer is transported to the photoreceptor by buckets. How is it transported during magnetic brush development?

   a. It sticks to a rotating magnetic roll.

   b. It travels along magnetically generated electrostatic fields.

   c. It is magnetized and sticks to the metal photoreceptor surface.

Review Answers

1. Two-component developer is made up of **toner** and **carrier**.

2. The **b. carrier bead** is larger than the **a. toner particle**.

3. When toner and carrier beads are mixed together, contact electrification occurs. This causes the toner and carrier to have **b. opposite** charges.

4. The toner must have a negative charge, if the photoreceptor has a positive charge in the latent image areas after exposure.

5. After exposure, the electrostatic field tends to be stronger at the edges of solid areas. The **c. developer electrode** is the device that is used to help achieve even development over the whole area.

6. In magnetic brush development, electrostatic fields involving the photoreceptor are created by magnetism.

   b. False

7. During cascade development, the developer is transported to the photoreceptor by buckets. It is transported during magnetic brush development because **a. it sticks to a rotating magnetic roll.**

TRANSFERRING

Introduction

We now have a toner image on the photoreceptor which matches the original. This developed image needs to be moved onto paper. The process used is called transferring. During the transfer process, the paper is brought in contact with the latent image on the photoreceptor. Perfect registration aligns the edges of the photoreceptor with the edges of the non-image areas which match the background areas of the original.

The toner is then transferred onto the paper in a process based on electrostatics. Once the toner is on the paper, the paper is stripped from the photoreceptor.

We will begin our discussion just as the paper reaches the photoreceptor. Not discussed is how the paper gets from the paper tray to the photoreceptor or the timing mechanism which ensures the perfect registration.

Toner Transfer

This diagram shows the first step in the toner transfer process.

The photoreceptor was charged positively by the charge corotron. The toner was charged negatively by mixing it with carrier beads. The toner is held onto the photoreceptor surface by the attraction between the positively charged latent image and the negatively charged toner.

For the toner to move onto the paper, the paper must also be positively charged. The charge on the paper must create a force between the paper and the toner that is stronger than the force between the photoreceptor and the toner.

The paper is charged by a transfer corotron. As the paper contacts the photoreceptor, it passes between the transfer corotron and the photoreceptor. The transfer corotron is a positive DC corotron. It charges the paper positively, similar to the way the charge corotron charged the photoreceptor surface.

Because the photoreceptor substrate is grounded, the negative charge in the substrate increases in response to the positively charged paper. The resultant force between the paper and the substrate causes the paper to stick or "tack" to the photoreceptor, helping the transfer process.

There are now three main electrostatic fields around the photoreceptor. First is the field between the toner and the photoreceptor surface. Second is the field between the paper and the photoreceptor substrate. Third is the field between the positively charged underside of the paper and the negatively charged developed image.

The force of the third field is designed to be stronger than the attraction between the positively charged photoreceptor surface and the developed image.

Therefore, when the paper is removed from the photoreceptor, negatively charged toner particles stick to the positively charged paper.

Not all the toner transfers to the paper. Because of the positive charge on the photoreceptor, some toner remains on the photoreceptor. The toner that stays on the photoreceptor is called the residual image. It will be removed from the photoreceptor during the cleaning process.

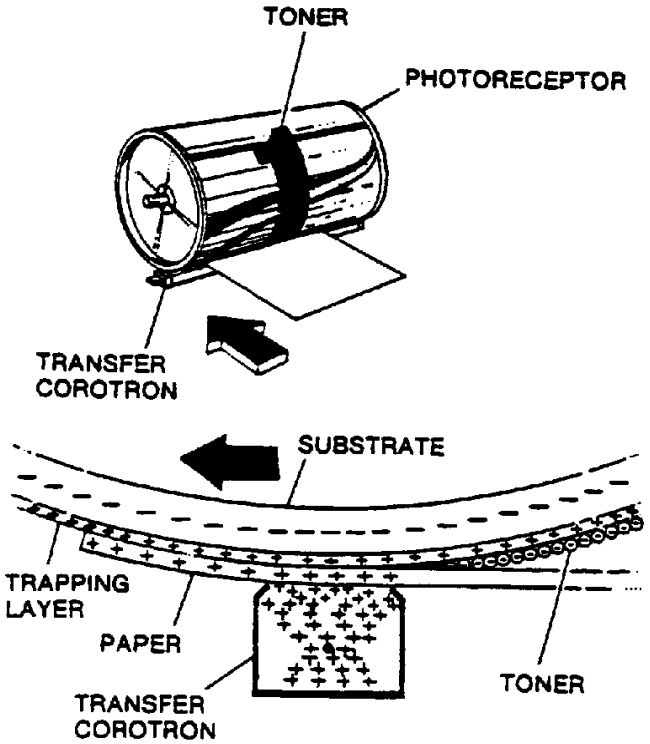
TONER
PHOTORECEPTOR
TRANSFER
COROTRON
SUBSTRATE
TRAPPING
LAYER
PAPER
TRANSFER
COROTRON
TONER

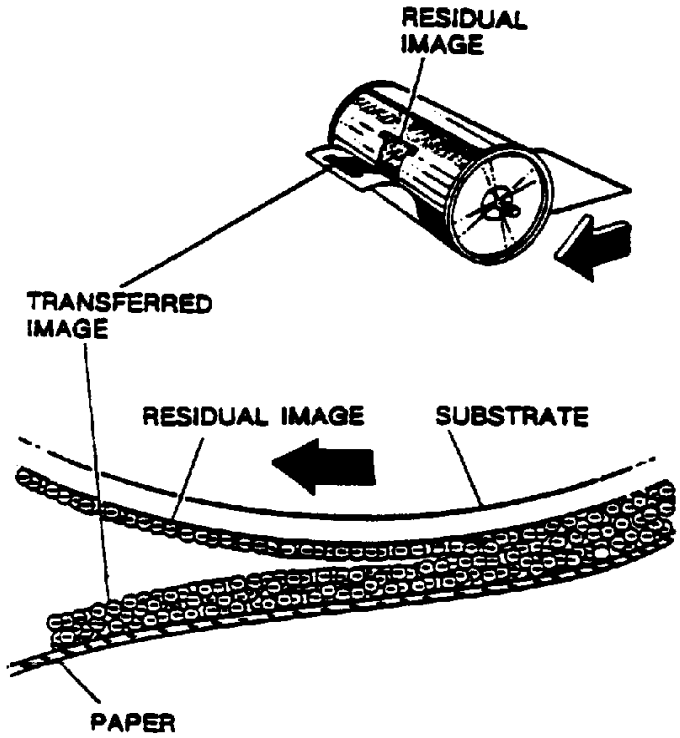
RESIDUAL
IMAGE
TRANSFERRED
IMAGE
RESIDUAL IMAGE
SUBSTRATE
PAPER

Pretransfer

In some systems, a pretransfer step is used to improve the transfer process. This process is usually used when other variables in the process make background (stray toner) a problem.

Before transfer, the strength of the charge in the toner image areas of the photoreceptor is reduced. The field strength in the non-image areas is left unchanged. This way, less positive charge is needed on the paper for transfer.

To accomplish the pretransfer reduction in charge, most systems use a lamp. This pretransfer process is similar to the exposing process. Because the photoreceptor surface is a photoconductor, light causes some of the positive charge on the photoreceptor to neutralize. This decreases the attraction of the toner to the photoreceptor surface.

In some systems, an alternating current (AC) corotron is used for pretransfer. Because it operates on AC current, the pretransfer corotron generates both positive and negative ions. This has the effect of making negative ions available to reduce the positive charge in the image area, but not to the point that the ions are available to reduce the charge in non-image areas. The charge in the image area is great enough to attract the negative ions away from the area of the corotron. The charge in the non-image areas does not attract negative ions.

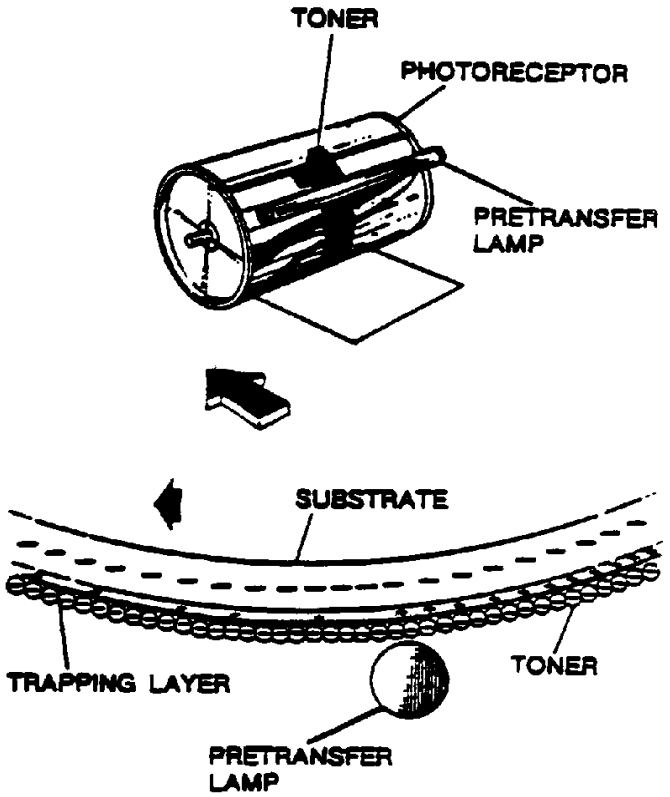

Paper Removal

The second part of the transfer process is to remove the paper from the photoreceptor. The actual removal is either done mechanically (occasionally with a little electrostatic help) or electrostatically.

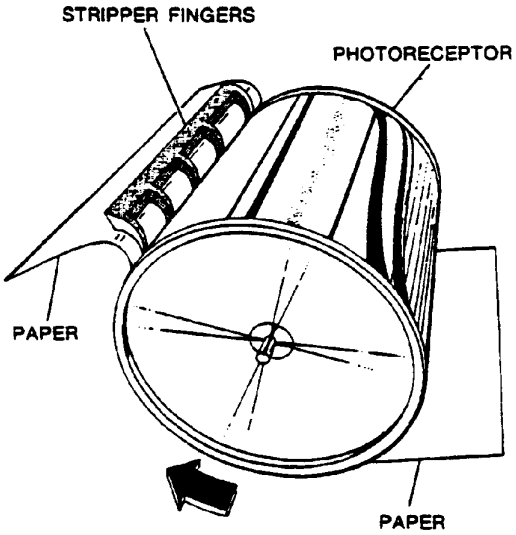

Stripping Mechanism

The most common method for removing the paper uses some kind of belt, positioned on or near the photoreceptor, to actually lift the leading edge of the paper from the photoreceptor.

This belt may be a piece of mylar, plastic, a series of stripper fingers, or rollers.

Detack Corotron

The transfer process causes the paper to be electrostatically attracted to the photoreceptor substrate. Some systems use a corotron to neutralize this attraction after toner transfer is complete. This neutralization is accomplished with an AC corotron (sometimes called a detack corotron).

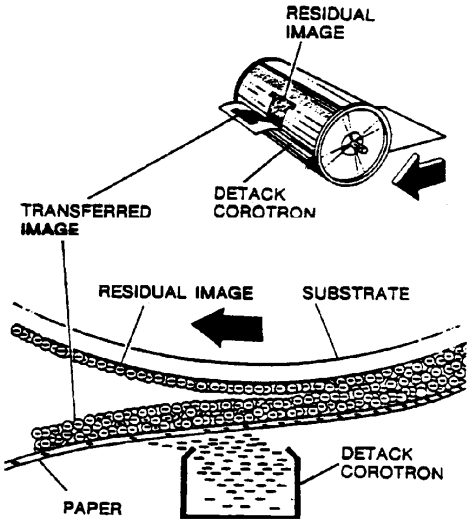

Like the pretransfer corotron, the detack corotron makes negative ions available for combination with the positive ions on the copy paper. Enough of the positive charge is neutralized to reduce the strong attraction between the paper and non-image areas of the photoreceptor. Some positive charge is left so that the negatively charged developed image is still attracted to the paper.

The detack corotron is occasionally used with the other mechanical methods of paper removal.

Air Manifold

A third (and less common) form of paper removal involves loosening the leading edge of the paper with a puff of air.

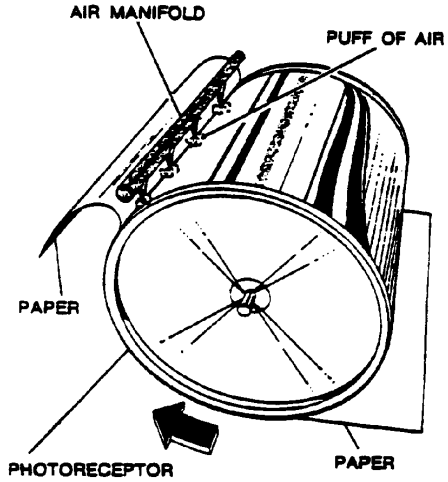

This page was intentionally left blank.

Review

1. The toner has a negative charge after the development step. What charge does the paper receive during transfer?

   a. Positive

   b. Negative

2. Which of the following causes the paper to tack onto the photoreceptor?

   a. The negatively charged toner.

   b. The smooth photoreceptor surface.

   c. The grounded photoreceptor substrate.

3. All the toner does not transfer to the paper. What is the reason?

   a. Toner will not stick to itself.

   b. The positive charge on the photoreceptor surface still attracts some of the toner.

   c. Some of the toner has lost its charge.

4. The pretransfer step is designed to

   a. reduce the strength of the charge field in the image areas.

   b. prepare the paper for transfer.

   c. reduce the strength of the charge in the non-image areas.

5. Why is an AC corotron used for pretransfer?

   a. Both positive and negative ions must be made available to the photoreceptor.

   b. Alternating current is self-regulating.

   c. Making only negative ions would neutralize the charge in non-image areas and cause background.

6. A detack corotron

   a. pulls the paper off the photoreceptor.

   b. reduces the charge on the paper.

   c. reduces the charge on the toner particles.

Review Answers

1. The toner has a negative charge after the development step. The paper receives a *a. positive* charge during transfer.

2. The paper tacks onto the photoreceptor due to

   c. the grounded photoreceptor substrate.

3. All the toner does not transfer to the paper because

   b. the positive charge on the photoreceptor surface still attracts some of the toner.

4. The pretransfer step is designed to

   a. reduce the strength of the charge field in the image areas.

5. An AC corotron is used for pretransfer because

   c. making only negative ions would neutralize the charge in non-image areas and cause background.

6. A detack corotron

   b. reduces the charge on the paper.

FUSING

Introduction

We now have a toner image on the paper and a residual image on the photoreceptor. The toner image is held to the paper by a weak electrostatic force. If the image touches anything, it will smear. The fusing process permanently bonds, or fixes, the toner image to the paper.

Toner is made from a resin that contains particles for coloring, usually carbon black particles. Changing the toner to a liquid allows the resin to flow into the paper fibers and leaves the image areas covered with permanently bonded particles. As with the other xerographic processes, several methods exist to accomplish fusing. The method used depends primarily on the kind of toner and on the copier speed. The most common means of fusing the toner is through conduction heating. Other methods include convection heating, radiant heating, chemical melting, or a combination of the heating methods.

Since conduction fusing is the most common, it will be discussed in the greatest detail.

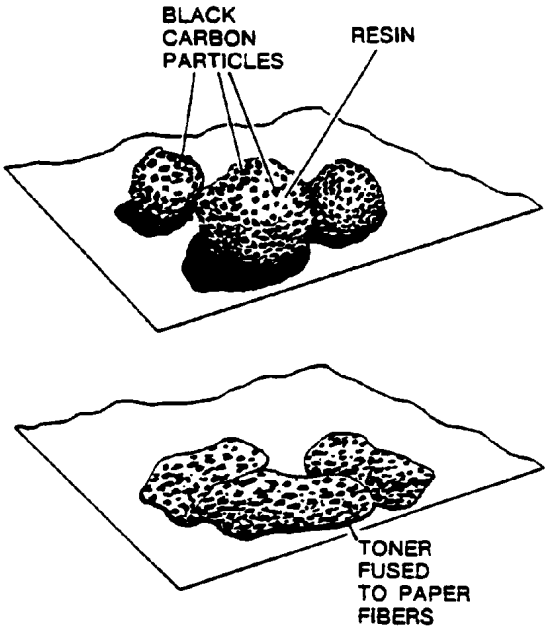

Conduction Fusing

In conduction fusing, the copy paper with the dry toner particles moves between two rollers (the fuser roller and the pressure roller) to the output tray. The fuser (heat) roller is heated from the inside. When the copy paper contacts the fuser roller, the heat melts the toner into the paper fibers.

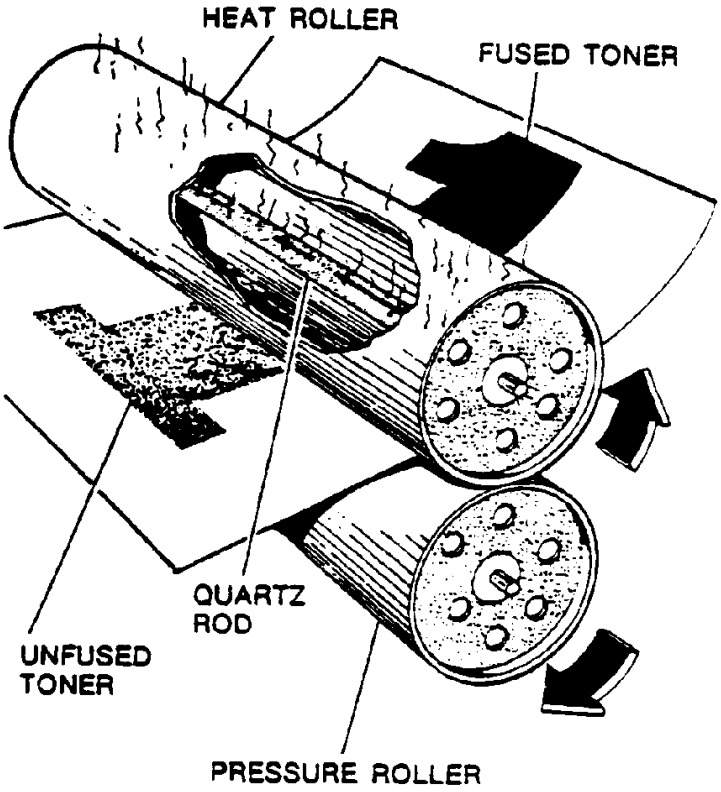

Conduction (hot roll) fusing has characteristics which affect the design of the process.

The toner and paper are pressed against the roller. The melted toner may stick to the roller, as well as to the paper. Any toner that stays on the fuser roller may be carried to the next piece of paper. The roller design must minimize the possibility of toner contamination. It must also include some cleaning method.

The paper is pressed against the roller. Thus, it could wrap around the roller. The roller must prevent paper wrap-around or another means of stripping the paper from the roller is needed.

The temperature of the fuser roller must be carefully controlled so enough heat is supplied to melt the toner into the paper, but not enough to damage the paper.

Because of all this, the conduction fusers are usually designed with the following components:

- fuser roller
- pressure roller
- fuser lubricating components
- fuser cleaning components
- paper stripping components

All conduction fuser systems contain the first two items. The remaining items are optional. Whether or not a system contains them depends upon the roller design.

Fuser Roller

In most copiers, the fuser roller is a hard, metal, hollow tube. It contains a heating element, which is usually a quartz rod. The heat is conducted from the rod to the surface of the roller.

The roller is usually coated with Teflon. The Teflon coating keeps materials, including toner, from sticking easily to the roller.

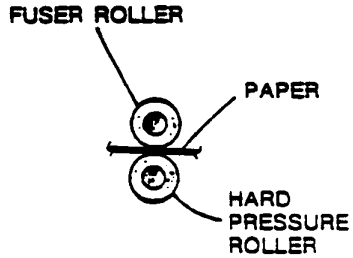

Pressure Roller

The pressure roller is usually a soft, silicone rubber roller. The pressure roller ensures that the paper is pressed against (and a little around) the fuser roller. This helps force the melted toner into the copy paper. If the pressure roller were a hard roller, the paper would be against the heated fuser roller at only one point on the roll.

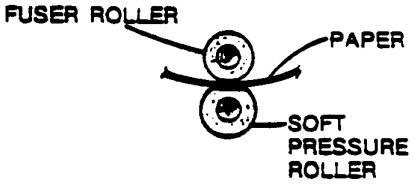

The soft roller forms the paper to the roller's curved shape. The soft roller also ensures a long enough heating cycle to completely melt the toner. Silicone rubber is used for the roller because it is not easily damaged by heat.

Fuser Lubricating Systems

The non-stick quality of the Teflon fuser roller is enhanced by lubricating the roller with silicone oil. Lubricating the roller helps to prevent toner from sticking to the roll and paper wrap-around. It also helps clean any toner from the fuser roller.

The most common lubrication method is to constantly wipe the fuser roll with a wick. The wick is impregnated with silicone oil, often called fuser oil or release agent. An attached reservoir of fuser oil ensures that the wick remains oiled. Fuser oil can be added to the reservoir as needed.

Other lubricating methods include using an oil-filled applicator roll which cleans the fuser roller between copies, feeding fuser oil directly through the teflon coating on the fuser roller, or constantly wiping the fuser roller with an oil-impregnated web.

The oil-impregnated web is more of a cleaning system than any of the other systems. The web automatically advances. This ensures that the portion being used is clean. The web must be periodically replaced.

In some copiers, the fuser is lubricated in a totally different manner. The toner is embedded with a release agent. This special toner eliminates the need for a special fuser lubricant and cleaning system.

Fuser Cleaning Systems

Some systems, primarily those without lubricating components, contain a method for removing unwanted toner from the fuser roller. The common cleaning method is a stiff wiper blade which scrapes the toner from the roller.

Paper Stripping Systems

The Teflon coating on the fuser roller and lubrication help to prevent paper wrap-around. A few systems have a mechanism to ensure that paper does not wrap. Stripper fingers or a stripper edge are commonly used. This is similar to removing the copy paper from the photoreceptor.

Radiant Fusing

Radiant fusing systems use intense light, usually a quartz rod, to melt toner. The quartz rod, after being lit for a short time, gives off a great deal of heat.

Since the toner image areas on the paper are dark, they absorb the light radiating from the rod. The light absorbed by the toner contains enough heat to melt the toner.

The white areas of the paper (the background areas) reflect the light. They are not subject to most effects of the heat.

Radiant fusing is often used in the high-speed copiers. In these copiers, the method is called flash fusing. As with flash imaging, a xenon flash lamp is used to provide a momentary bright light.

Because of the wavelength of the xenon light, fusing is accomplished in a short time, using intense heat, without scorching the paper.

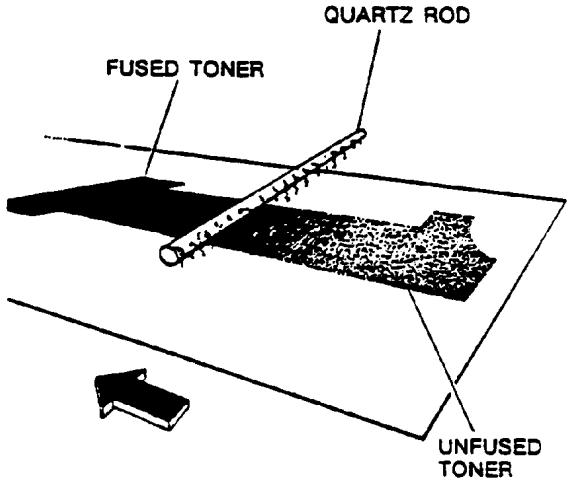

Convection Fusing

In convection fusing, the melting process takes place in an enclosed space using heated air. This is like an oven. The copy is either placed in the heated changer for a certain time period or passes through the chamber on a transport.

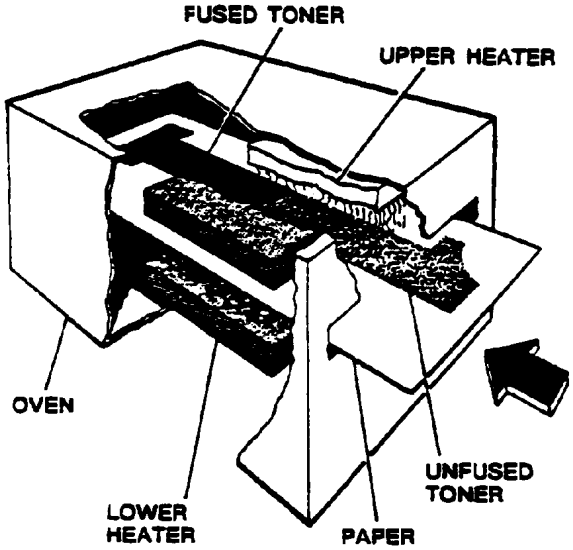

Combination Radiant/Conduction Fusing

In combination fusing, elements of all three previously described methods are used. The copy passes through a chamber that acts as an oven (convection). This oven contains a lamp which heats the toner (radiant). The copy is then passed over a heated pad which provides the final toner melting (conduction).

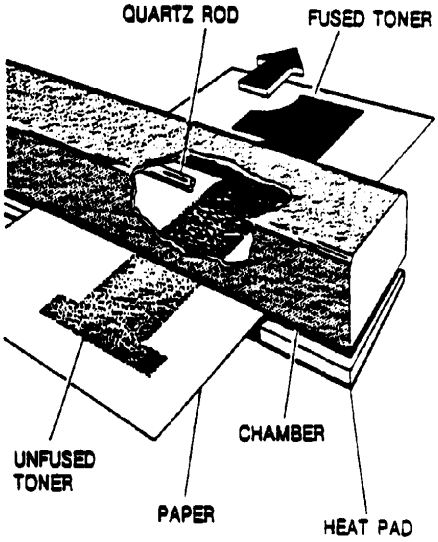

Vapor Fusing

In vapor fusing, the fumes of a chemical solvent are used to soften the toner to liquid. In a typical vapor fuser, the unfused copy is placed on a wireform tray and inserted into a chamber. The chamber is filled with fumes that evaporate from a wick soaked with solvent.

Although the method is slow, it is suitable for applications where heat could damage the copy material.

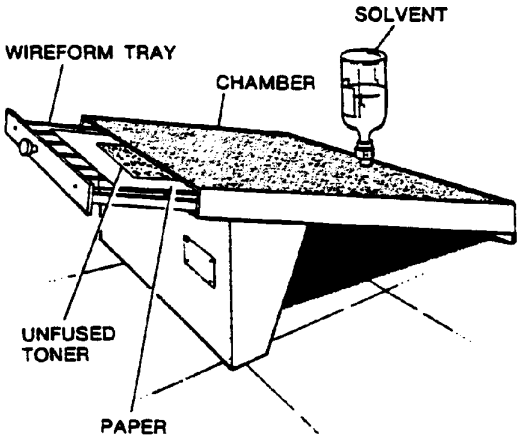

This page was intentionally left blank.

Review

1. The main function of the fusing step is

   a. toner is pressure bonded to the paper.

   b. a sticky substance in the paper is activated.

   c. toner is turned to liquid and is bonded to the paper.

2. Match the following:

   a. Radiant fusing

   b. Vapor fusing

   c. Convection fusing

   d. Conduction fusing

   ____ Light is used to melt toner.

   ____ Toner is melted in an oven

   ____ Heat is transferred to the toner using a heat roller.

   ____ No heat is used.

3. Toner is made from resin because

   a. of its electrostatic properties

   b. resin is easily liquefied

   c. coloring agents can be suspended in resin

   d. all of the above

Review Answers

1. The main function of the fusing step is

   c. toner is turned to liquid and is bonded to the paper.

2. Match the following:

a. Radiant fusing	Light is used to melt toner
b. Vapor fusing	No heat is used
c. Convection fusing	Toner is melted in an oven
d. Conduction fusing	Heat is transferred to the toner using a heat roller

3. Toner is made from resin because

   d. all of the above

CLEANING

Introduction

The xerographic copy is complete. Now, the residual image must be removed from the photoreceptor. (The residual image is the toner image which remains on the photoreceptor after the transfer process.) The photoreceptor must be made ready for the next copy cycle. These are accomplished by this step, cleaning.

As with all the other steps centered around the photoreceptor, cleaning deals with electrostatic fields. Two distinct requirements of the cleaning process are based on electrostatics.

First, the electrostatic field between the residual toner and the photoreceptor must be reduced. This allows toner to be easily removed. Second, any remaining charge on the photoreceptor must be removed. This ensures that the photoreceptor starts the next copy cycle electrically neutral.

These two requirements will be discussed as separate steps. In most systems, however, the same action accomplishes both.

In addition to these two electrostatic functions, cleaning includes two other functions. Toner is physically removed from the photoreceptor.
Removed toner is either disposed or recirculated.

Photoreceptor cleaning has four functions.

- Reduce the field that still holds the toner to the photoreceptor
- Remove the toner from the photoreceptor
- Dispose or recirculate the removed toner
- Neutralize any remaining charges on the photoreceptor

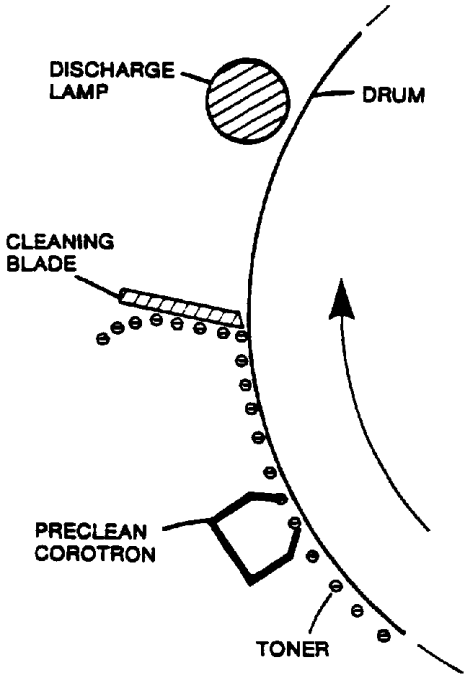

Reducing the Charge

All toner was not moved during transfer. The layers of toner closest to the photoreceptor surface in the image area, as well as the stray toner in the non-image areas, are still held by weak electrostatic forces.

The electrostatic field between the toner and the photoreceptor needs to be reduced before removing the toner. This reduction in charge is accomplished with either a lamp or an AC corotron. This is similar to the way charge is reduced in the pretransfer step. These components are referred to as the preclean lamp or preclean corotron.

When a lamp is used, the light discharges the positive charges on the photoreceptor. When an AC corotron is used, the corotron produces both positive and negative ions. The alternating ions enable the photoreceptor discharge to be controlled.

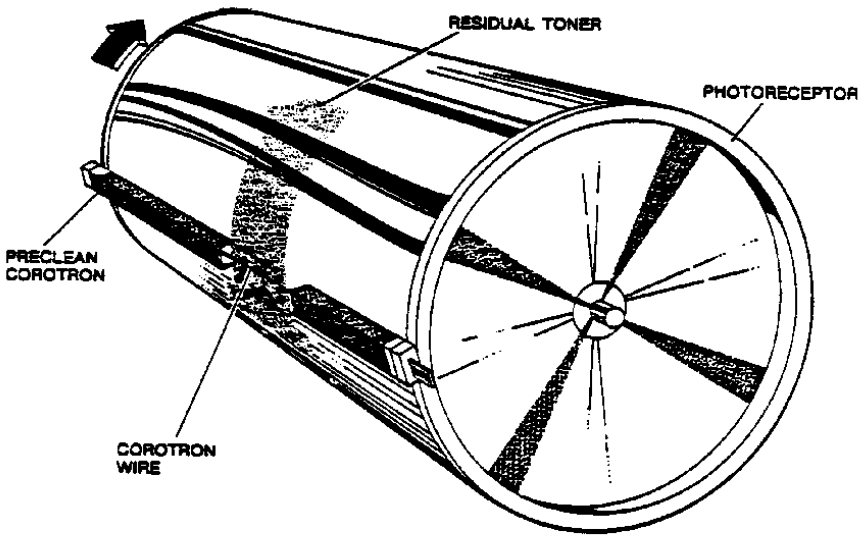

Removing the Toner

After the electrostatic field between the toner and photoreceptor is neutralized, the toner must be physically removed from the photoreceptor and deposited in a sump area. This step is accomplished mechanically, usually with a cleaning blade. Other methods include a magnetic brush or a soft brush and vacuum.

Cleaning Blade

Toner can be removed from the photoreceptor by scraping it with a blade. The flexible blade is usually made of rubber or a synthetic material. The blade is positioned at an angle to the photoreceptor surface. The toner is physically scraped off.

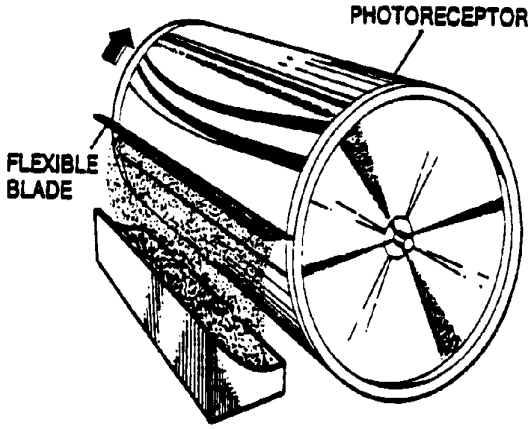

Blade cleaning must work without damaging the photoreceptor. The blade must be very carefully positioned against the photoreceptor. In addition, the toner particles are usually mixed with a lubricant to minimize damage from the blade scraping.

In some copiers, the blade is against the photoreceptor only during the copy cycle. The rest of the time, the blade is retracted from the photoreceptor to minimize photoreceptor damage.

Once the toner is removed, it is moved to a reservoir or sump area. From the sump area, the toner either moves back to the developer housing for reuse or to a sump bottle for disposal.

Magnetic Brush

Some copiers use a magnetic roll to remove the toner. The brush created by the roll is made up of toner particles.

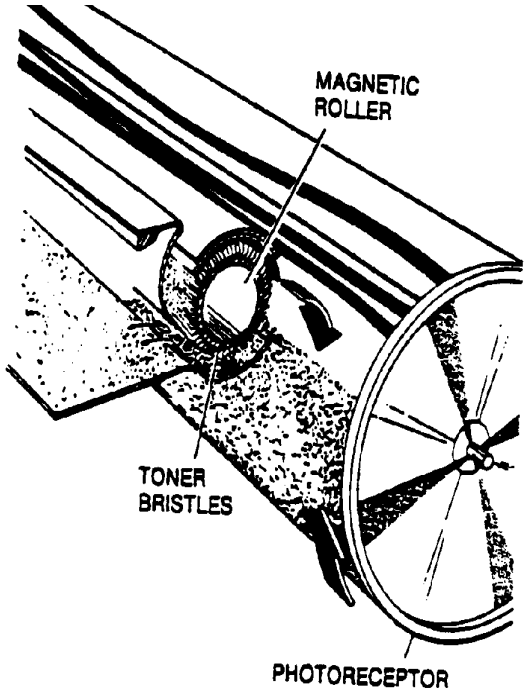

The electrostatic field between the toner and the photoreceptor is now virtually non-existent. The toner is attracted from the photoreceptor to the magnetic roll, forming the brush.

As with the blade system, the toner is moved to a sump area. From there, the toner is either disposed of or returned to the developer housing.

Soft Brush

With soft brush cleaning, toner is brushed from the photoreceptor. A soft bristled brush and the photoreceptor rotate in opposite directions. The brush is inside a housing. The housing has a vacuum system which removes the toner as it is swept off by the brush. The vacuum helps send the toner back to the developer housing or into a disposal bottle. The brush bristles eventually wear out, and must be replaced.

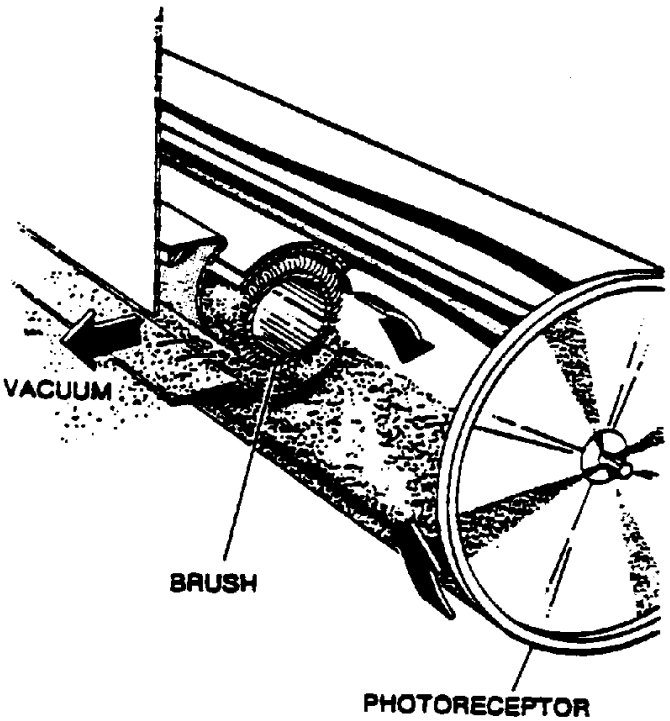

Disposing of or Recirculating the Toner

Once the toner is off the photoreceptor and onto the cleaning device, it needs to be put somewhere. The toner is either recirculated back into the developing system or disposed of into a toner dump bottle.

Toner Disposal

As toner works its way through the xerographic process, it often becomes contaminated. Paper particles are a common contaminant. Many systems dispose of the toner, rather than risking affecting the quality of the developing process.

The toner is carried from the cleaning mechanism to a disposal bottle. When the bottle is full, it needs to be replaced with a new, empty bottle.

Under no circumstances should the toner in the disposal bottle be put back into the toner hopper. This would defeat the purpose of the disposal system.

Toner Recirculation

Copiers which recirculate toner transport the toner from the cleaning mechanism to the developer housing. In most cases, the toner is transferred back into the developer sump. In a few cases, the toner is transferred into the toner hopper.

Removing the Remaining Charge

To ensure that the photoreceptor is ready for the next copy cycle, it must be electrically neutral. In many copiers, the pre-cleaning exposure to light or voltage is enough to ensure electrical neutrality. In other systems, an extra discharge step (sometimes called pre-charge) is used. In soft brush cleaning systems, this discharge function is absolutely necessary since the movement of the soft brush on the photoreceptor induces a charge. This charge, must then be removed.

As with pretransfer and cleaning, discharging utilizes either a light source or a corotron.

A variety of light sources are used. These include incandescent lamps, fluorescent lamps, neon lamps, light emitting diodes (LEDs) or electroluminescent (EL) strips.

When a corotron is used, the discharge corotron is usually a DC negative corotron. The corotron produces negative ions which neutralize any remaining positive charge on the photoreceptor.

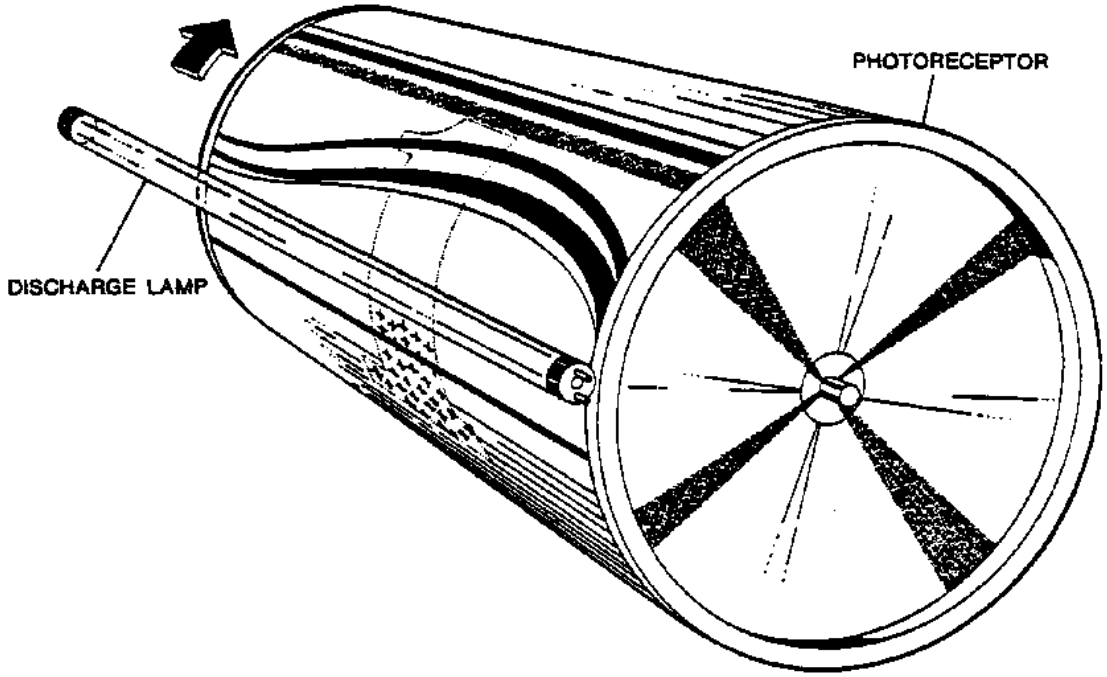

This page was intentionally left blank.

Review

1. Some toner is still on the photoreceptor after transfer. What must be done before it can be removed?

   a. It must be cooled.

   b. The photoreceptor must be stopped.

   c. The electrostatic fields on the photoreceptor must be neutralized.

2. Which of the following is not a method used for cleaning toner from the photoreceptor?

   a. Scraping

   b. Washing

   c. Brushing

3. When a shining light prepares the photoreceptor for the next cycle, it:

   a. removes the remaining charge from the photoreceptor.

   b. charges the photoreceptor

   c. neutralizes any remaining toner

Review Answers

1. Some toner is still on the photoreceptor after transfer. What must be done before it can be removed?

   c. The electrostatic fields on the photoreceptor must be neutralized.

2. Which of the following is not a method used for cleaning toner from the photoreceptor?

   b. Washing

3. When a shining light prepares the photoreceptor for the next cycle, it:

   a. removes the remaining charge from the photoreceptor.

PROCESS INTERACTION

Introduction

We have discussed the seven xerographic processes and the underlying principles of each.

You should understand the details of the seven processes and the electrostatic theories that enable them to work together. This section discusses how these seven processes interact. How problems in each process affect the others will be discussed. We will relate the problems to copy quality defects. We will review the seven processes.

Let's look at our copier model again. The central element in the xerographic system is the photoreceptor. The photoreceptor, in this case a drum, rotates through fixed functional areas. This means that the xerographic processes are taking place simultaneously at different points on the photoreceptor.

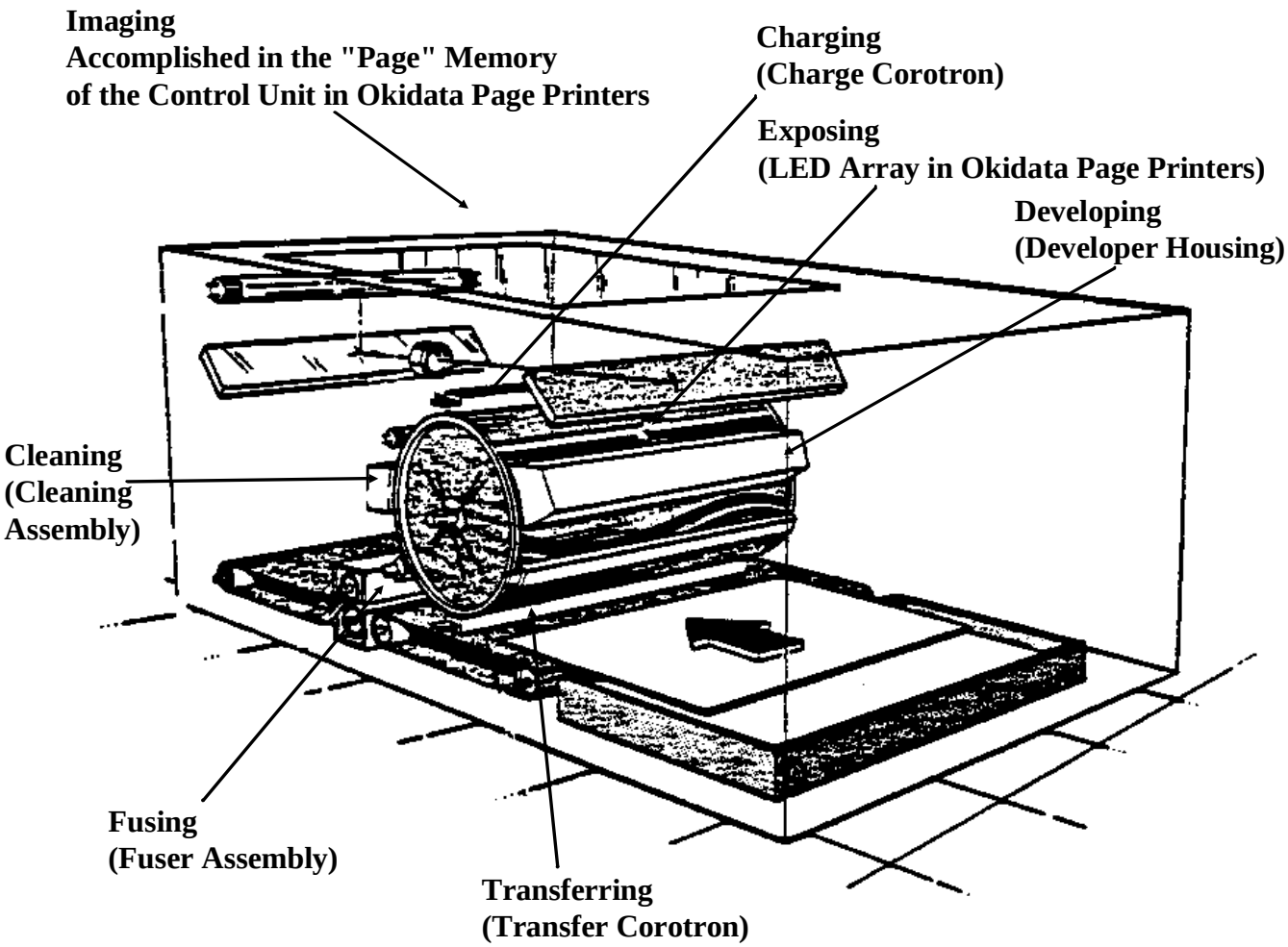

Let's follow a point on the photoreceptor as it travels through the entire copy process. Let's say that the point is prior to the first edge (lead edge) of the image. The lead edge can be viewed as a line front to back on the photoreceptor.

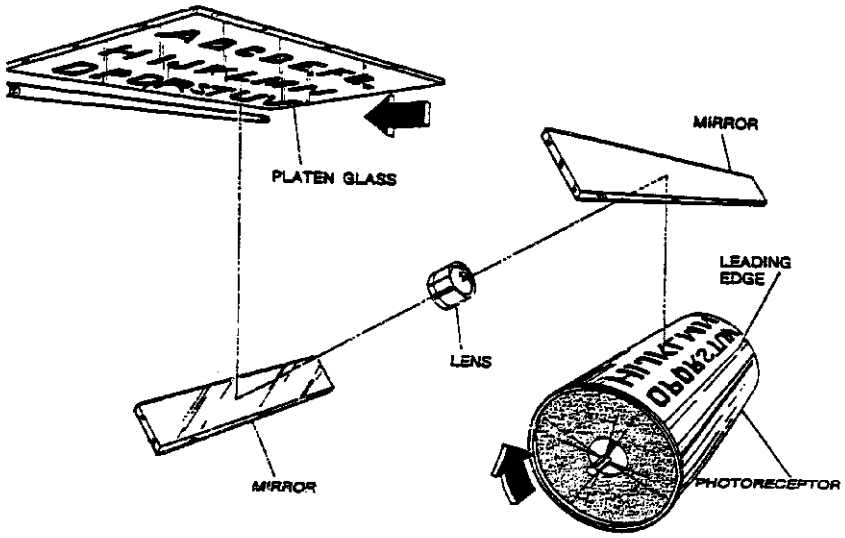

Our point is at the twelve o'clock position, just prior to charging.

Before the print button is pressed, the photoreceptor is at rest in darkness. As soon as the print button is pressed, the photoreceptor begins to rotate, a DC power supply activates all the corotrons, the fuser heater is switched on, and the timing for the scanning process begins.

Our point moves through the charging area, at the one o'clock position, and becomes positively charged. As it moves to the imaging area, the image scanning and exposing begins. The scan timing ensures that the image is projected onto a charged portion of the photoreceptor and that the size and focus of the image are correct.

The exposing function ensures a correct exposure time (to light) for photoreceptor. The imaging and exposing processes work together to expose our point when it reaches the two o'clock position.

Once exposed, our point moves toward developing, at the three o'clock position. Before it reaches developing, the mixing process in the developer housing starts. This ensures that the developer is charged and that the toner concentration is correct when the developing process starts. The magnetic roll starts to turn. The developer reaches the photoreceptor area before the leading edge of the latent image enters the developing process.

Now our point is through developing. It has toner attached, and the point is moving into transfer. All the lamps and corotrons in the transfer area were switched on earlier. Their outputs are optimized. The point is matched with the charged paper at the six o'clock position. Toner is transferred to the paper.

As the point is being developed, the copy paper is moving toward the transfer area. Usually, the copy paper leaves the paper tray at the same time scanning the original begins. When the beginning of paper movement depends on the length of the paper path and the size of the paper, copy paper may leave the tray at a different time. In all cases, the timing is set so that the leading edge of the paper just matches the leading edge of the photoreceptor image.

As the photoreceptor continues to rotate, our point moves past the paper-stripping portion of transfer. The paper continues straight to the fusing function. Our point, with residual toner, enters the cleaning function at the nine o'clock position.

The fuser heater was switched on earlier. The fuser roller is at the correct temperature.

The copy paper travels between the fuser roller and the pressure roller. The heat melts the toner into the paper fibers. Then, the copy travels to the output tray.

At the same time, our photoreceptor point is being cleaned. As soon as the paper is stripped off, our point passes through the preclean function. During precleaning, the positive surface charge is reduced. The point moves past the cleaning blade, which scrapes all the toner off.

Our point is now ready for the next copy cycle. With more than one copy selected, our point moves into the charging area, and the entire cycle repeats.

Remember that our point is on the lead edge of the image. The image of an original actually stretches around the circumference of a photoreceptor drum. How far around the photoreceptor depends on the size of the original and the feed direction of the copy paper.

A second point, located on the trail edge of the image, is several functions behind the lead edge point.

The lead edge point may be in the transfer function when the second point is being charged--and a third point between the two is in developing. Thus, all seven processes are happening simultaneously.

The relative locations of the points have a special effect on the cleaning process. Since the cleaning process is the last to happen, the photoreceptor must rotate until the second point has completed the cleaning process.

This is the entire copying cycle. Now, let's review each process individually and discuss some things that can go wrong.

Charging

When an operator presses the print button to make a copy, the photoreceptor begins rotating. A DC power supply activates the charging device. This puts a charge on the photoreceptor, as well as all other corotrons in the system. The charging device may be either a corotron, a scorotron, or a dicorotron.

The strength and uniformity of the charge placed on the photoreceptor are critical. They can be affected by a defective power supply, a dirty corotron wire or shield, or a defective photoreceptor.

If either the corotron or the corotron wire/shield is dirty, the charge on the photoreceptor will not be uniform. This results in uneven density or even drop-outs on the copy.

If the charge corotron is not parallel to the photoreceptor, the density of the copy will be uneven.

If the charging voltage on the corotron is too high, arcing can result and damage the photoreceptor.

If the charge is too low, the quality of the output copy will be light. Simply adjusting the charge current to get better copy quality can cause other problems in the system, such as background.

If the charge on the photoreceptor is too high, exposure will not lower the non-image charge enough. Toner then adheres to the background areas and transfers to paper, if the force between the toner and the photoreceptor is great enough to prevent proper transfer. If the force between the toner and photoreceptor is too great, problems in the cleaning process result as well.

Since charging requires ionization of air molecules, humidity can affect the strength of the charge put on the photoreceptor. This, in turn, affects copy quality.

The condition of the photoreceptor directly affects the charging process. As the photoreceptor ages, selenium crystallization increases. This affects the photoreceptor's ability to hold a charge. Furthermore, if the photoreceptor not grounded, the substrate layer cannot develop the negative charge necessary to hold the positive ions on the surface.

Imaging

The next process is imaging. A document is placed on the platen glass. When the print button is pressed, the document is illuminated. This is usually done with one or two quartz halogen lamps. High-speed copiers use xenon lamps to flash the entire document at one time.

Lamp output is critical in the xerographic process. Lamps, over time, may produce less light. A dim light will not discharge the photoreceptor as much as necessary. As a result, toner will be placed where it is not wanted. The contrast between the image and the background will not be sharp.

In addition, as lamps age, their color output changes. That affects the spectral response of the photoreceptor--how the photoreceptor reacts to different colors and densities on an original.

Also, lamps can overheat, which also changes the intensity and the color of the output.

Next, the document is scanned. The quality of the original affects the quality of the copy.

Scanning is usually done with a moving platen or with a moving lamp and lens carriage. This process is known as strip scanning. The image is projected to the photoreceptor in continuous segments rather than all at once.

Timing is important in the scan cycle. The lead edge of the original image must be projected onto the area of the moving photoreceptor that will contact the lead edge of the copy paper. Erratic driving of the scan system can cause a variety of copy quality problems such as skips or blurs.

While the document is being illuminated and scanned, the image is collected by a lens and projected, along the optical path, the photoreceptor surface. The placement of the lens and mirrors in the optical path is critical. If the lens is not positioned correctly, the image will be out of focus or the wrong size.

If any stray light is projected to the photoreceptor, image drop out will occur.

If the mirrors are not positioned correctly, the image will be projected to the wrong spot or will be distorted. Remember that the mirrors are first-surface mirrors and must be installed with the first surface toward the image. Installing mirrors incorrectly is a common problem after cleaning the mirrors. If the mirrors are backwards, the image on the photoreceptor and on the copy will be distorted.

Mirrors wear out after a period of time. Cleaning mirrors can wear the silver off the first surface. When this happens, light is not reflected from the mirror. This reflection loss can be identified by holding the mirror up to a light and looking through it. If you can look through it, the mirror should be replaced.

Exposing

Because the charged photoreceptor is a photoconductor, it discharges when exposed to light. The areas exposed to light conduct at least part of the charge to ground and have less charge than the areas that are not exposed to light.

In a typical copying job, the original document has various image densities. For the copy to look like the original, the photoreceptor must be discharged in amounts that correspond to those various densities. The length of time that the projected image strikes the photoreceptor surface during the exposing step determines the amount the photoreceptor is discharged. The time is usually determined by an exposure slit. The wider the slit, the longer the exposure.

The selenium alloy of the photoreceptor has a critical function in the exposing process. For exposing to work effectively, the photoreceptor must be kept in good condition. Many photoreceptors will fatigue when exposed to strong light and must rest before use. All photoreceptors are sensitive to heat. Overheating can cause crystallization, which affects the photoconductivity of the selenium. In addition, photoreceptors must be kept physically and chemically clean.

An edge erase lamp is usually used as part of the exposing step. The edge erase lamp discharges the photoreceptor outside the image area. For example, the lamp discharges the edges of the photoreceptor when narrow copy paper is being used. When wider paper is used, the lamp is switched off. Discharging these unused areas minimizes the amount of excess toner in the cleaning process and reduces toner consumption.

Developing

The most common method of developing uses a magnetic brush. The magnetic brush is formed by carrier beads which are attracted to a magnetic roll. The magnetic roll is positioned parallel to the photoreceptor.

When carrier beads are mixed with toner particles, the beads take on a positive charge and the toner takes on a negative charge. The two kinds of particles electrostatically cling to each other. The carrier beads are attracted to the magnetic roll. Toner is carried by the beads. It forms a brush which is brought into contract with the photoreceptor surface.

The areas of the photoreceptor that remain positively charged attract the negatively charged toner. Since the areas at the edges of a solid image have a stronger force field than the inner areas, something must be done to level the field. This is accomplished by biasing the magnetic brush. This strengthens the attraction of toner to the solid image areas while neutralizing the low charges that could cause background problems.

Electrostatic activity is necessary for proper developing. For example, if the carrier beads are defective, the electrostatic attraction between the beads and the toner will not be adequate. The toner will not be carried to the photoreceptor surface properly. It would be free to float throughout the system. If the toner is the wrong type, excessive of toner clouding can occur.

The carrier can be impacted with toner. Over time, the mechanical abrasion of the beads breaks down the bead coating. Without the coating, the beads can pick up a variety of impurities from the photoreceptor, especially when labels or two-sided copies are run through the copier. When this happens, the carrier does not carry the toner to the photoreceptor.

The bias on the developer roll must be adjusted correctly. Too much bias could cause the density to decrease, while too little bias could cause background problems. Loss of bias causes background, hollow characters, and poor solid-area coverage.

The toner dispensing system ensures the optimum toner concentration. If the system fails, the developer sump will contain either too much or too little toner.

Transferring

During transfer, the toner attracted to the positively charged image areas on the photoreceptor is now more attracted to a stronger positive charge on the paper. A transfer corotron places the positive charge on the paper.

To make the transfer of toner from the photoreceptor to the paper more effective, a pretransfer step can be used to reduce the positive charge on the photoreceptor.

After transfer, the paper is attracted electrostatically to the photoreceptor. A detack device is sometimes used to make removal easier. The detack corotron neutralizes some of the positive charge. A stripping edge is usually used to remove the paper from the photoreceptor.

If pretransfer discharge is too great, the toner will not be held to the photoreceptor surface at all. If pretransfer discharge is not great enough, the toner will tend to stay on the photoreceptor.

If the transfer corotron does not charge the paper enough, the toner will stay with the photoreceptor. The paper will not tack to the photoreceptor. Without the proper paper tacking, paper movement will be erratic. This causes toner disturbances.

If the paper is charged too much (transfer charge is too high), the paper will stick to the photoreceptor. This increases the likelihood of paper jams.

If the detack corotron discharges the paper too much, the toner will not stay with the paper. If the corotron does not discharge enough, the paper will be difficult to strip. The toner may be smeared. These devices are all close to each other. If one is out of adjustment, it could interfere with the operation of the others.

Fusing

Fusing is the process of permanently fixing the image of the copy. The toner is melted and flows into the paper fibers. The method most often used is hot roll fusing or conduction fusing. A heater within a roller heats the surface of the roller. As the paper is fed between the heated roller and a pressure roller, the toner melts and is fused to the paper. The heat roller is specially coated and is usually lubricated to prevent the paper from sticking.

Underheating results in an unfused copy. Overheating can cause scorched copies.

If the wrong toner is used, it will not melt into the paper. This could cause the paper-toner combination to stick to the roller instead.

Cleaning

Cleaning, the last step in the process, prepares the photoreceptor for the next copy cycle. The residual toner and any remaining charges are removed from the photoreceptor surface. Before the toner can be removed from the photoreceptor, the charges must be neutralized. This is usually done with a preclean lamp or corotron.

Next, the toner is removed from the photoreceptor. The most common method uses a flexible blade. The toner is then recirculated to the developer housing or deposited in a container for disposal.

Finally, any charges left on the photoreceptor are neutralized.

If all the toner is not removed, the result is obvious. It will end up on the next copy. Also, toner present during the charging process can result in a dirty charge corotron.

If all the residual charges are not removed, they will influence the electrostatic process on the next copy cycle.

Developer beads and hardened toner particles carried between the photoreceptor and the cleaning blade will scratch the photoreceptor.

These carrier beads and toner particles can also damage the cleaning blade. The blade can develop nicks or be folded over. When this happens, streaks develop on the copy.

Summary

You now understand what can go wrong with the xerographic process. If the photoreceptor, carrier, and toner are compatible, many of these problems will not occur. If the environmental factors are carefully controlled, the number of potential problems decrease. If the copier is maintained correctly, the xerographic functions will operate properly. Copy quality will always be good.

This page was intentionally left blank.